Management of lambda paths

by Tiago Fioreze

Supervisor: Aiko Pras

Institution: University of Twente

Outline

You are here!

- Outline
- Background information
- Current management approaches
- Self-management of lambda connections
- Self-management architecture
- Characteristics of flows eligible to lambda connections
- Current challenge
- Final considerations
- Q&A

Background information

- Hmm... what do you mean with **lambda-connection**?
  - A dedicated light path between two-end points where data (e.g., IP packets) is transferred.

- ok... and can you tell me one good **advantage** of using **lambda-connections**?
  - Big IP flows can be fully switched at optical level, where they get better QoS (e.g., no jitter) and at the same time the network level is relieved (offloaded).

Background information

- **IP flow**: a group of IP packets with the same properties

- The 5-tuple flow definition is commonly used:
  - Src/Dst ports
  - Src/Dst IP addresses
  - Protocol

- IP Flows can be defined of many different ways though:
  - Src/Dst autonomous systems

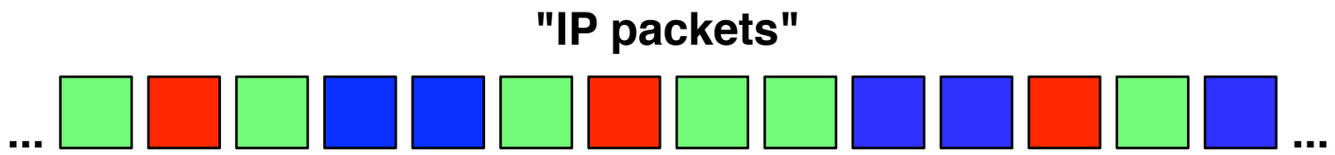

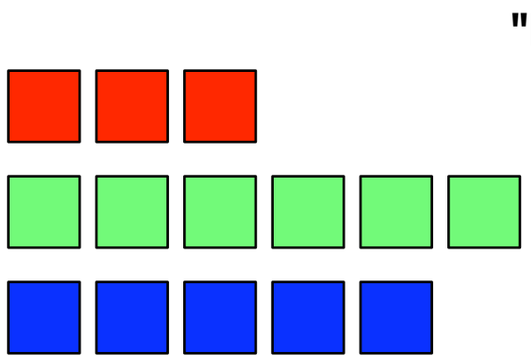

IP flows representation

Background information

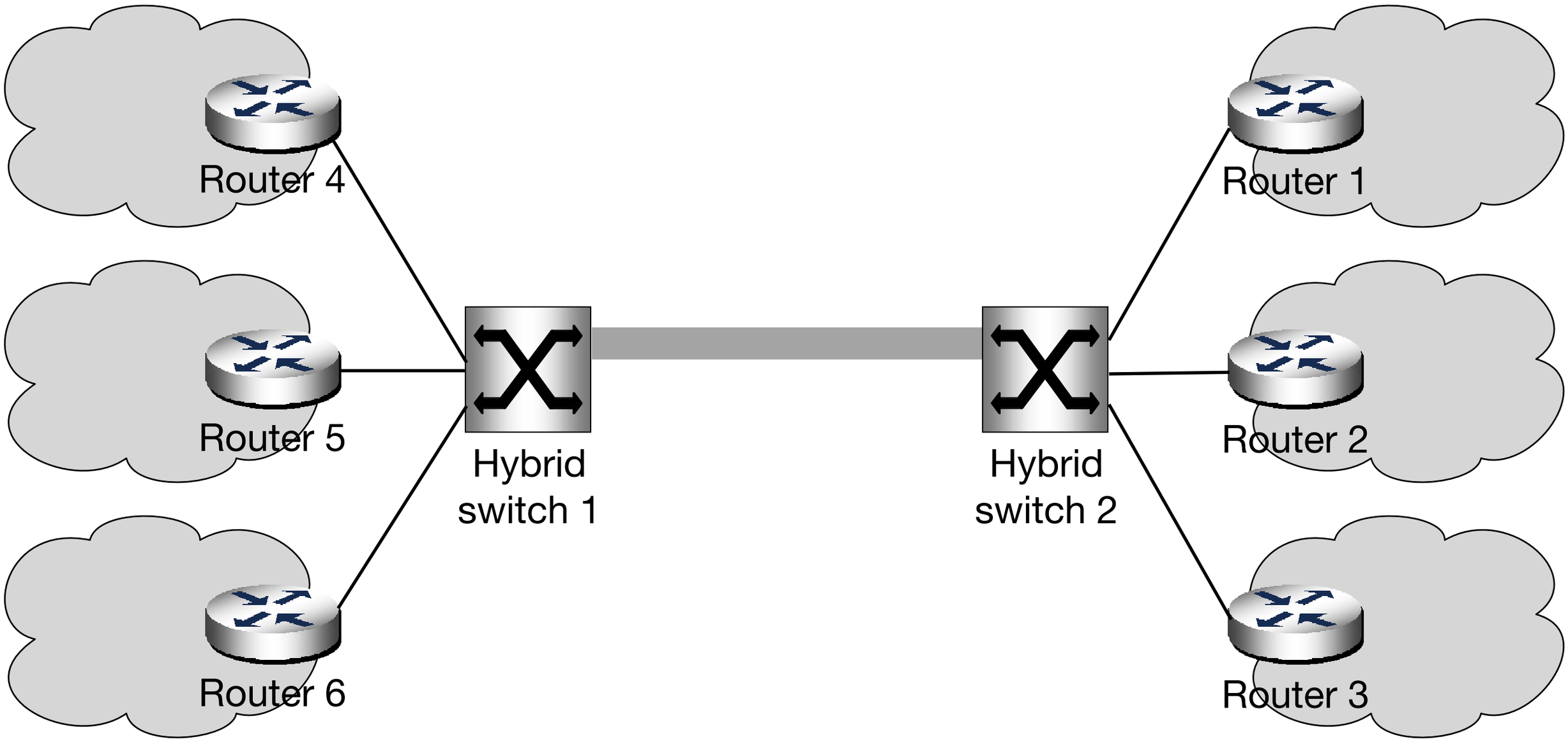

Background information

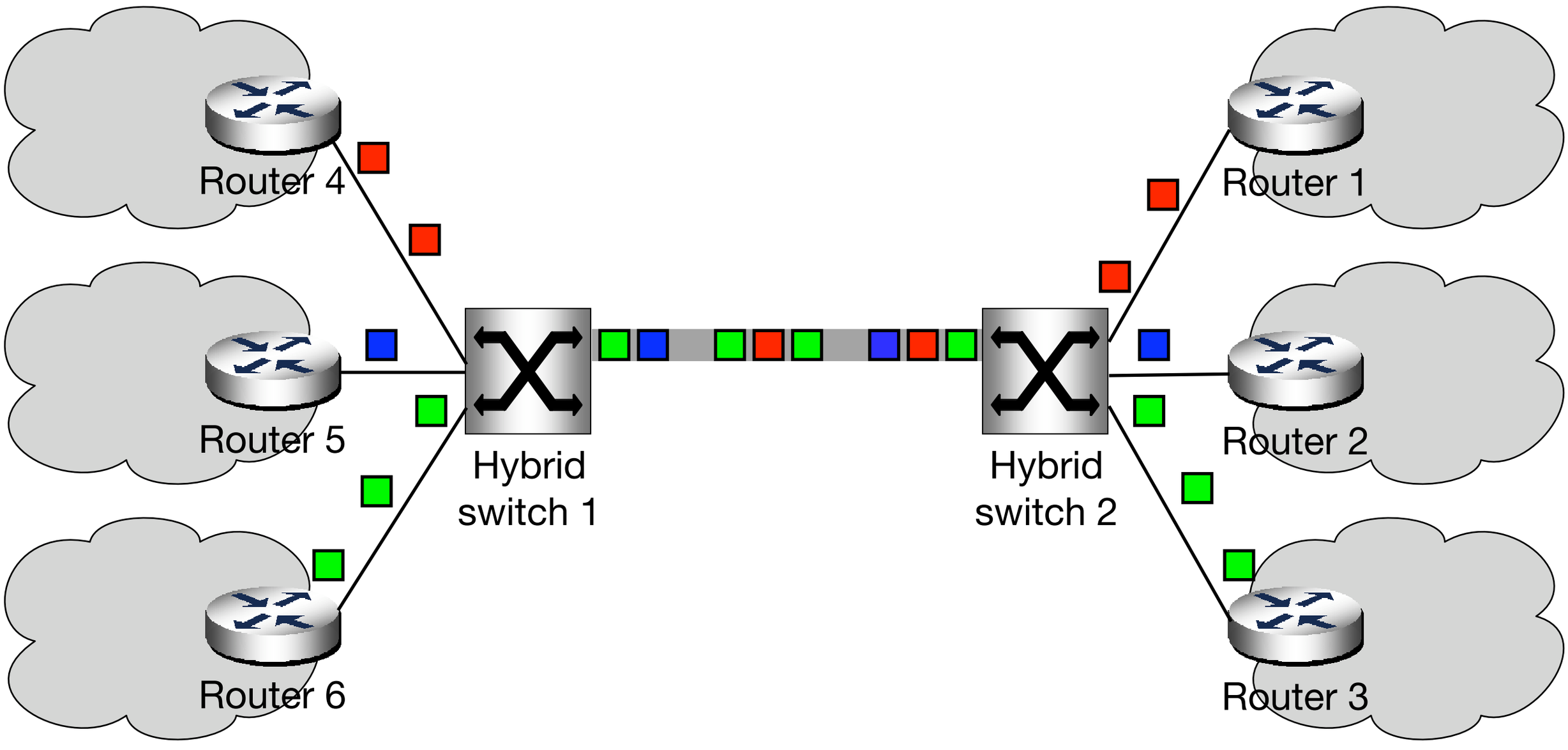

Background information

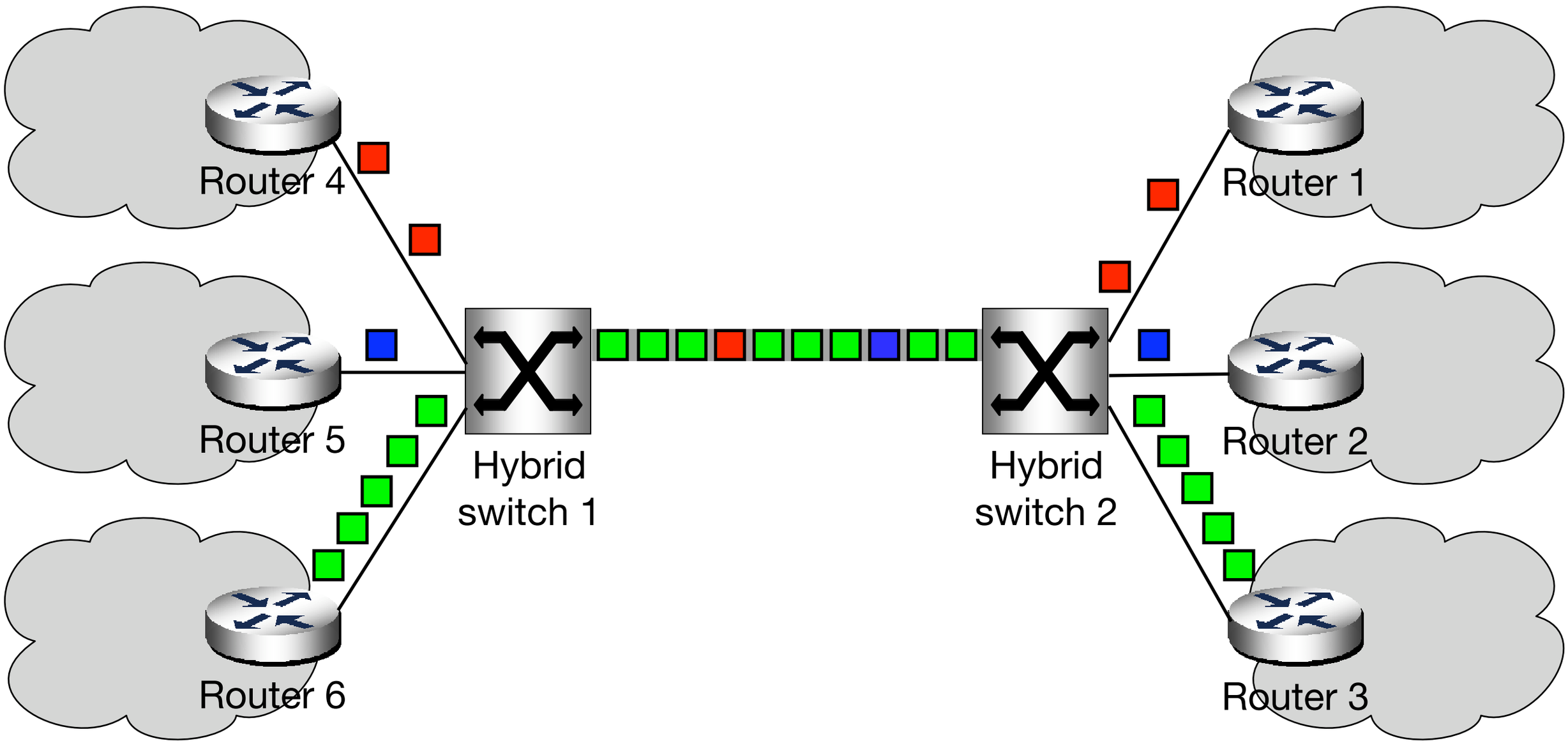

Background information

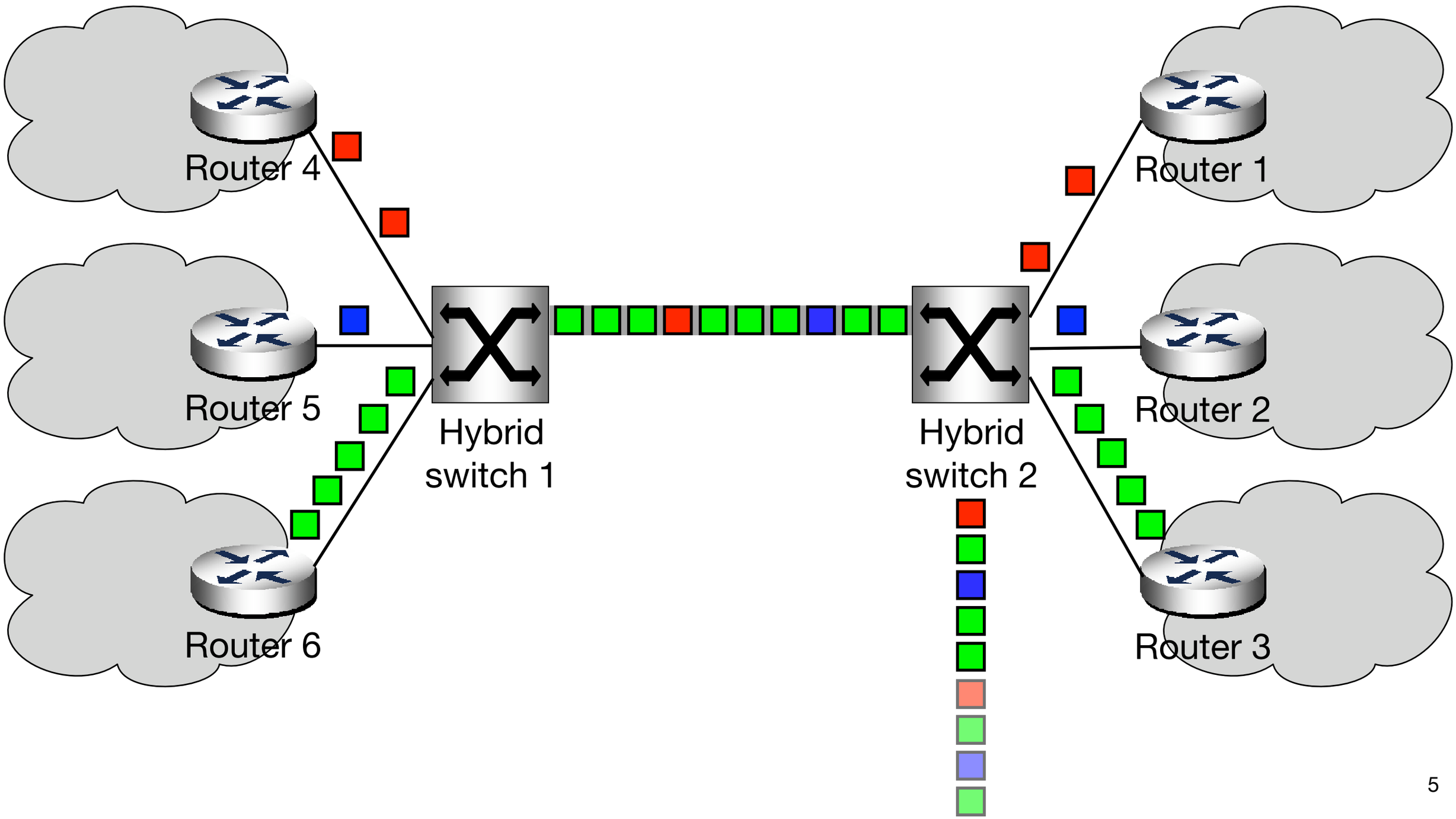

Background information

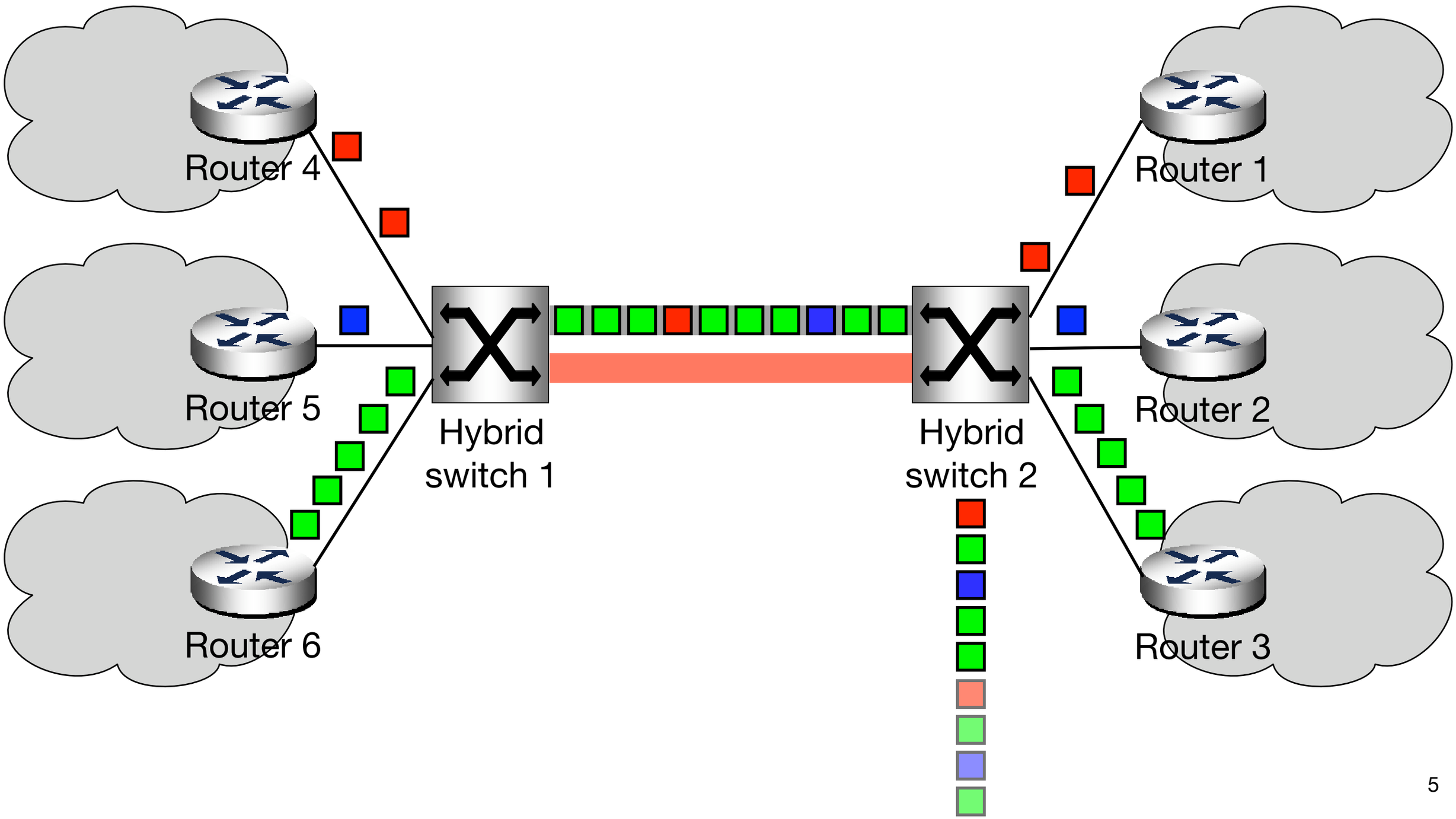

Background information

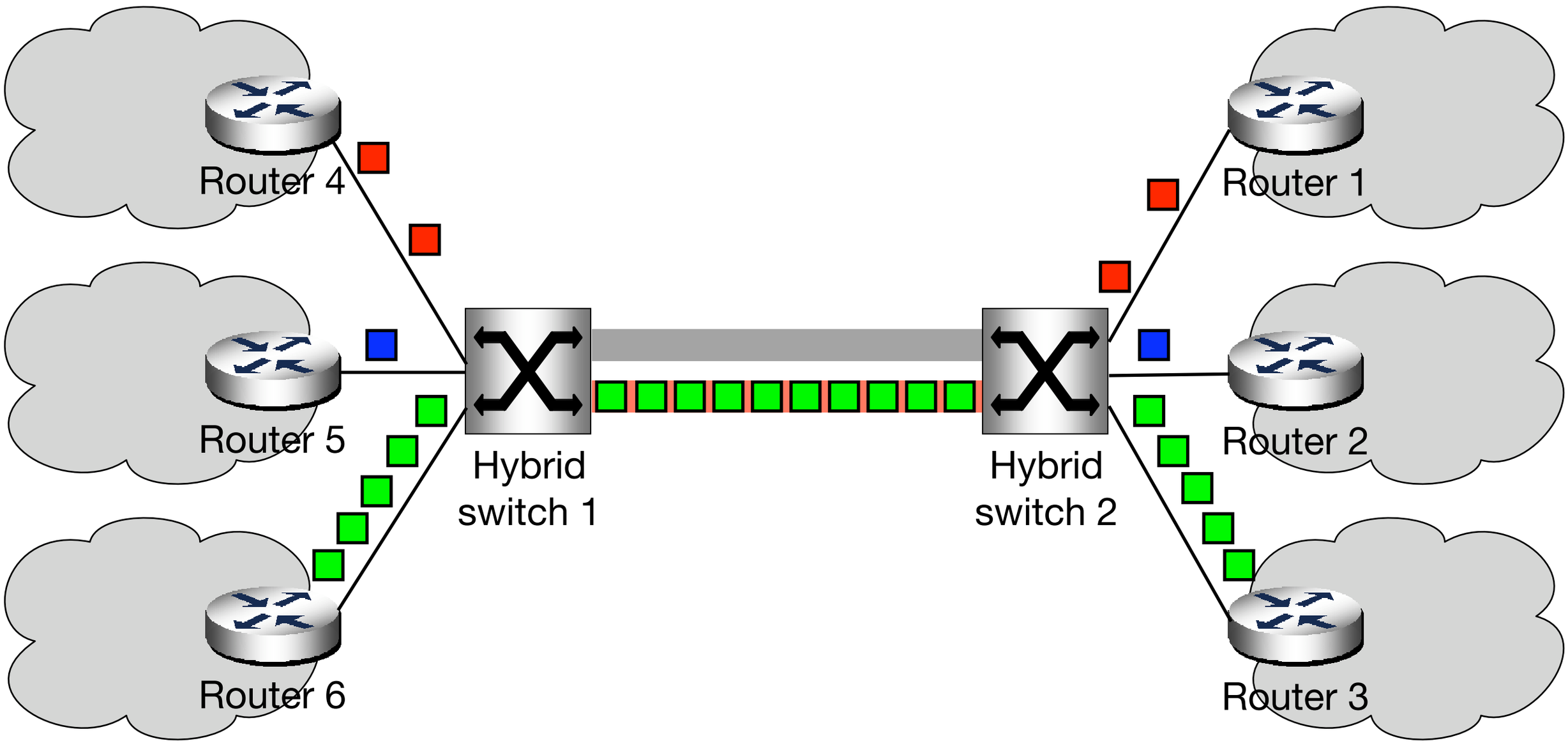

Background information

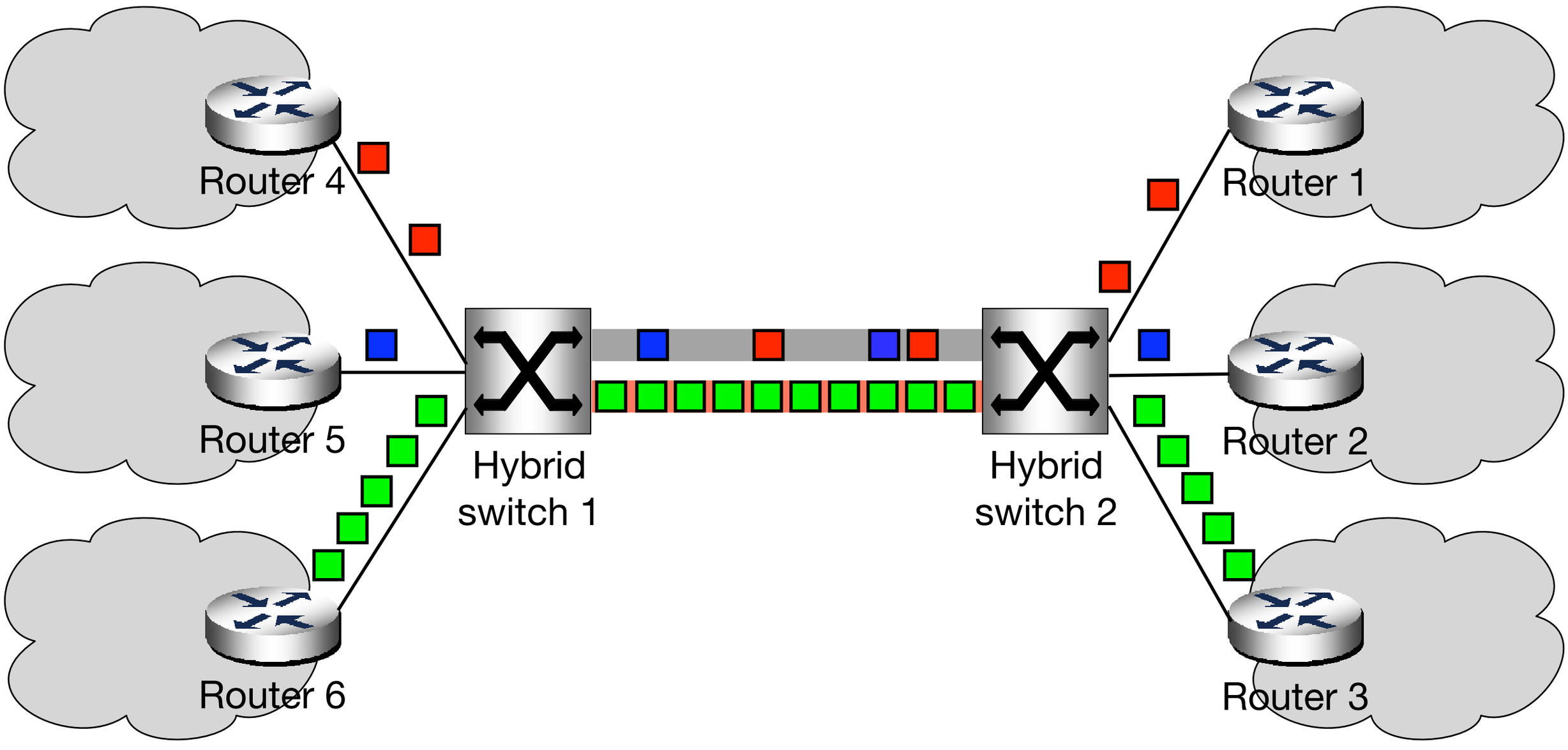

Current management approaches

- **Conventional management approach:**

✤ **Protocols**:

- Simple Network Management Protocol (SNMP)
- Command Line Interface (CLI)
- Transaction Language 1 (TL1)

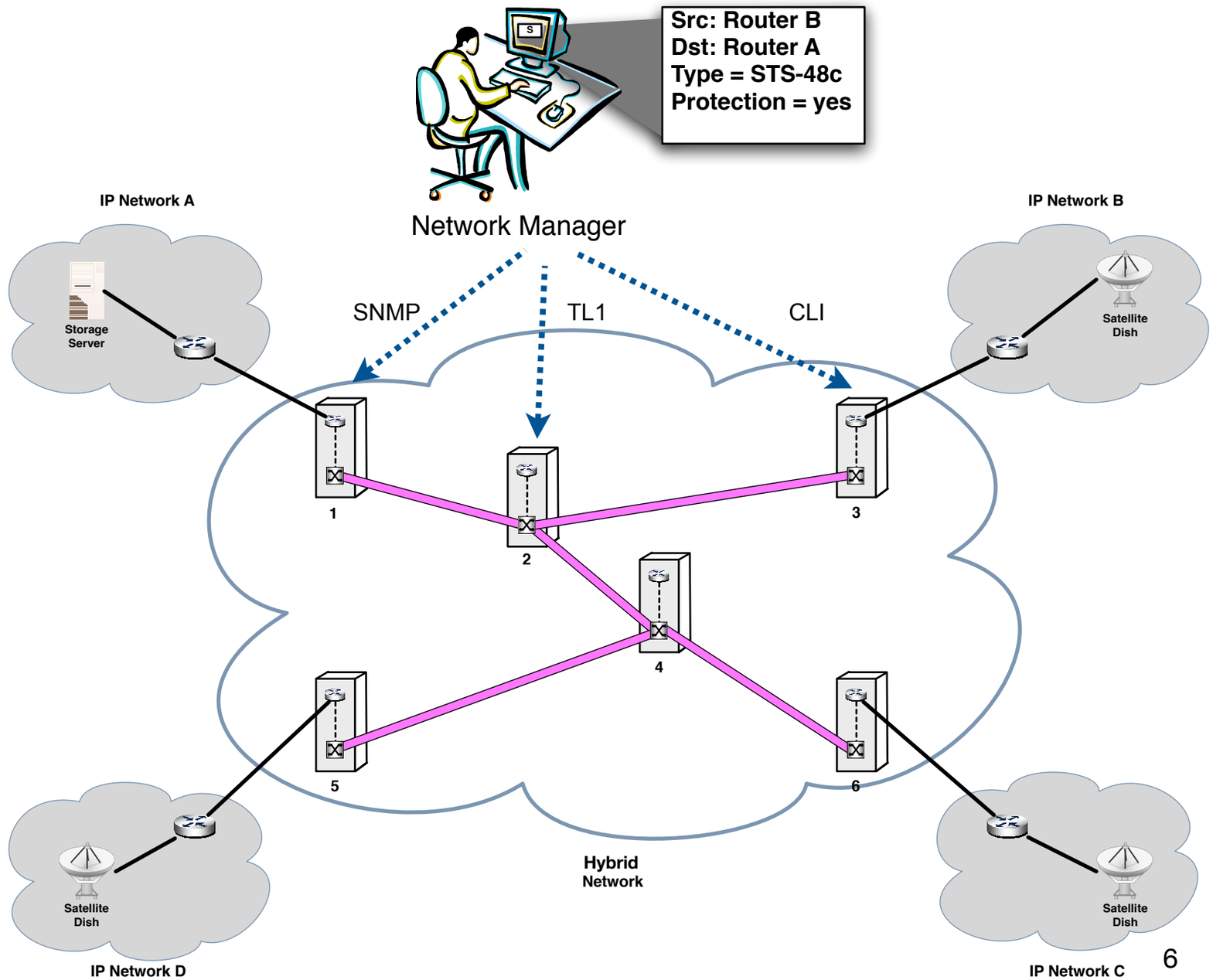

Current management approaches

- **Conventional management approach:**
  - Who is assigned to:

    1) select IP flows?

    ➡ Human manager

    2) establish and release lambda-connections?

    ➡ Human manager
  - ... and how about the optical switches?

    ➡ They execute orders! No much intelligence in them

Current management approaches

• Signaling approach: GMPLS

✣ **GMPLS Protocols**:

- OSPF-TE or ISIS-TE (routing protocols)
- LMP (Link Management Protocol)
- RSVP-TE and CR_LDP (reservation/label distribution protocols)

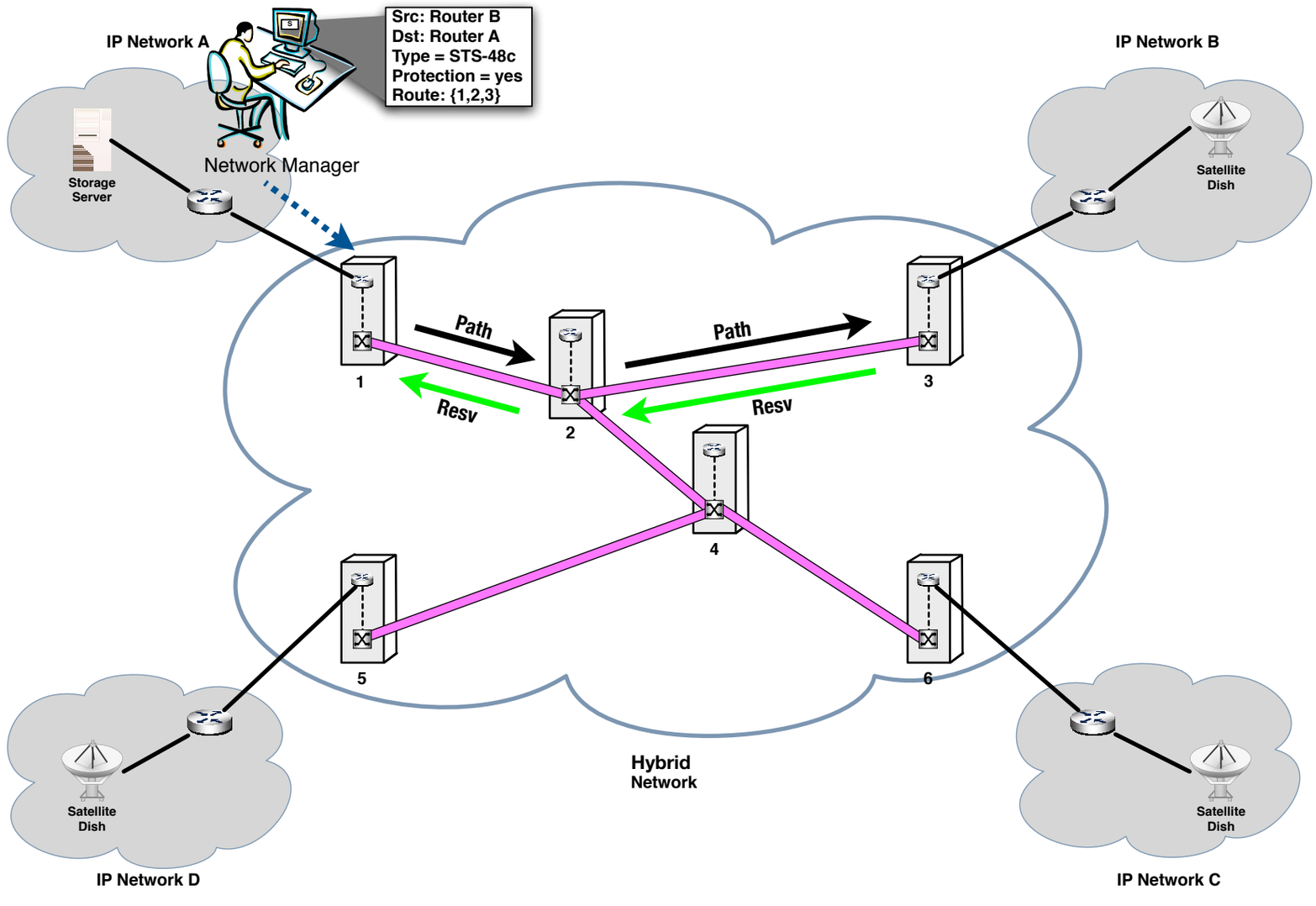

Current management approaches

- **Signaling approach:**
  - Who is assigned to:

    1) select IP flows?

    ➡ Human manager

    2) establish and release lambda-connections?

    ➡ Optical switches, but human managers trigger the action

  - Are the optical switches intelligent in this approach?

    ➡ Sort of... there is some intelligence in the optical switches in order to find a path between end-points (by using routing protocols) as well as create/release the lambda-connections (by using signaling messages)

Problem statement

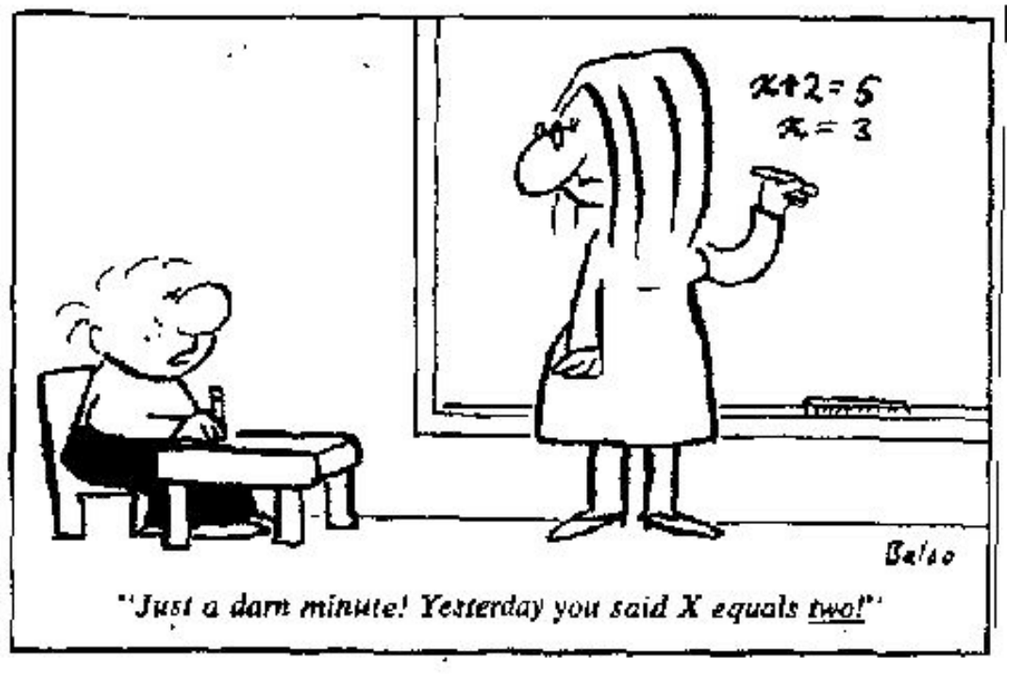

- Current approaches mostly depends on human intervention to select IP flows, and create and release lambda-connections
- As a result of that, current approaches can be characterized as:
  - Slow:
    - intra-domain: several hours or even days (flow selection + λ creation)
    - inter-domain: several days or even weeks (flow selection + λ creation)
  - Error prone:
    - Misconfiguration of lambda-connections parameters
    - Some flows may not be detected or they may be eligible for a lambda-connection during the establishment of the connection, but no longer when the connection is established

Self-management of lambda connections

- What is self-management of lambda-connections?
  - Self-management consists of a cooperation between the network and optical layers in order to automatically detect IP flows eligible to the optical level as well as establish/release lambda-connections for them.

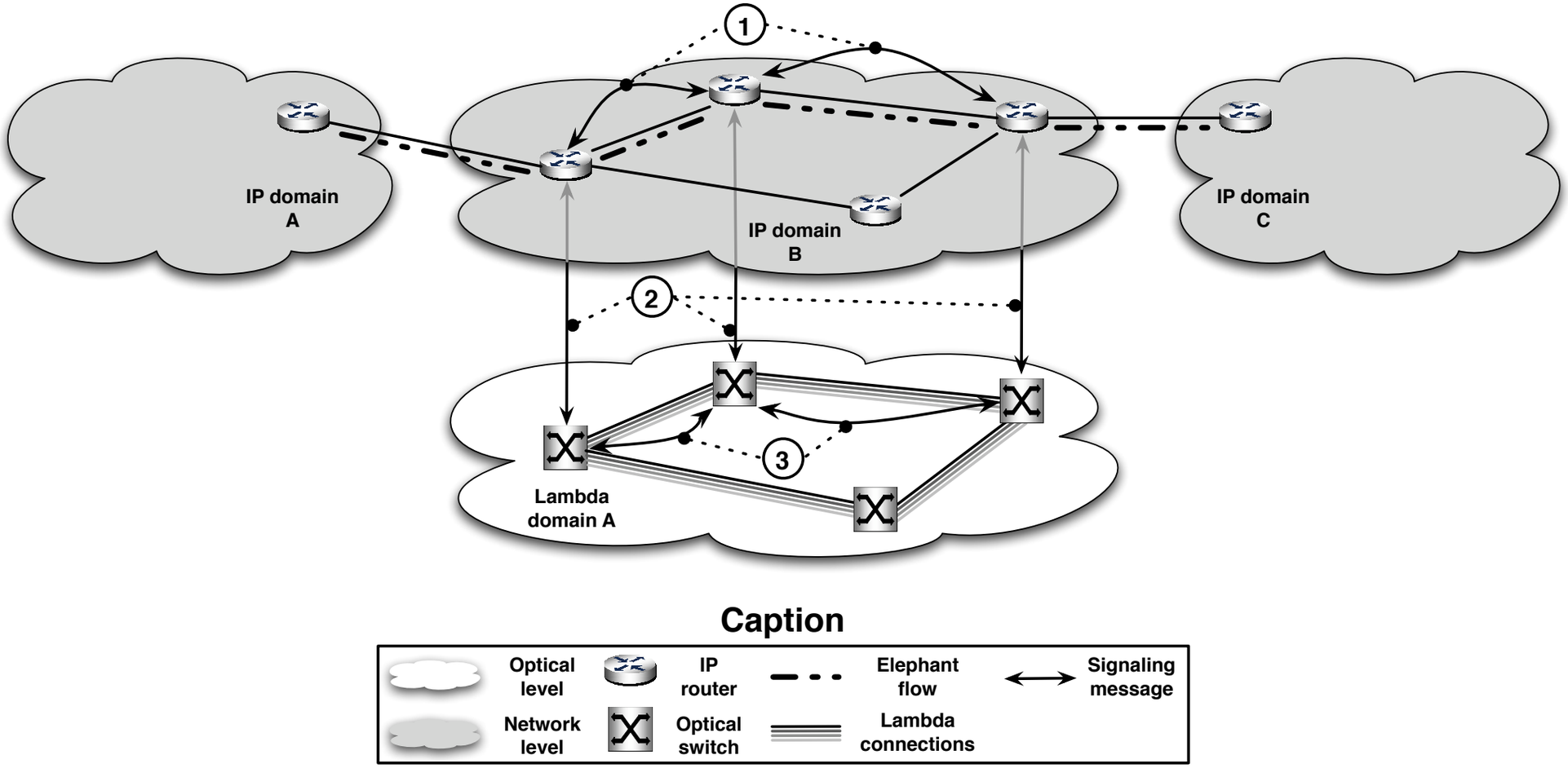

Comparison among management approaches

Management approach	Selection of IP flows	Establishment and release of lambda-connections
Conventional	Human manager	Human manager
Signaling	Human manager	Optical switches
Self-management	Optical switches	Optical switches

Functional architecture

Functional architecture

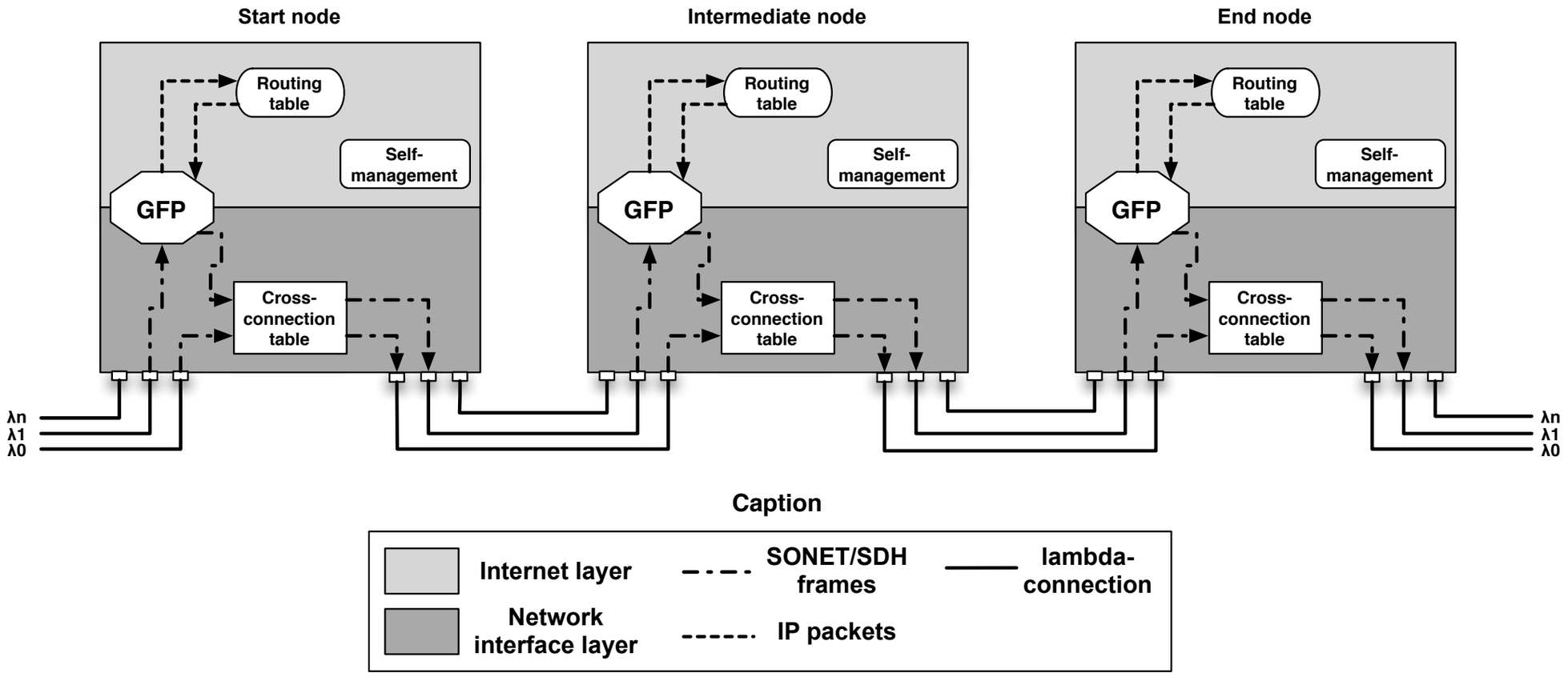

Functional architecture

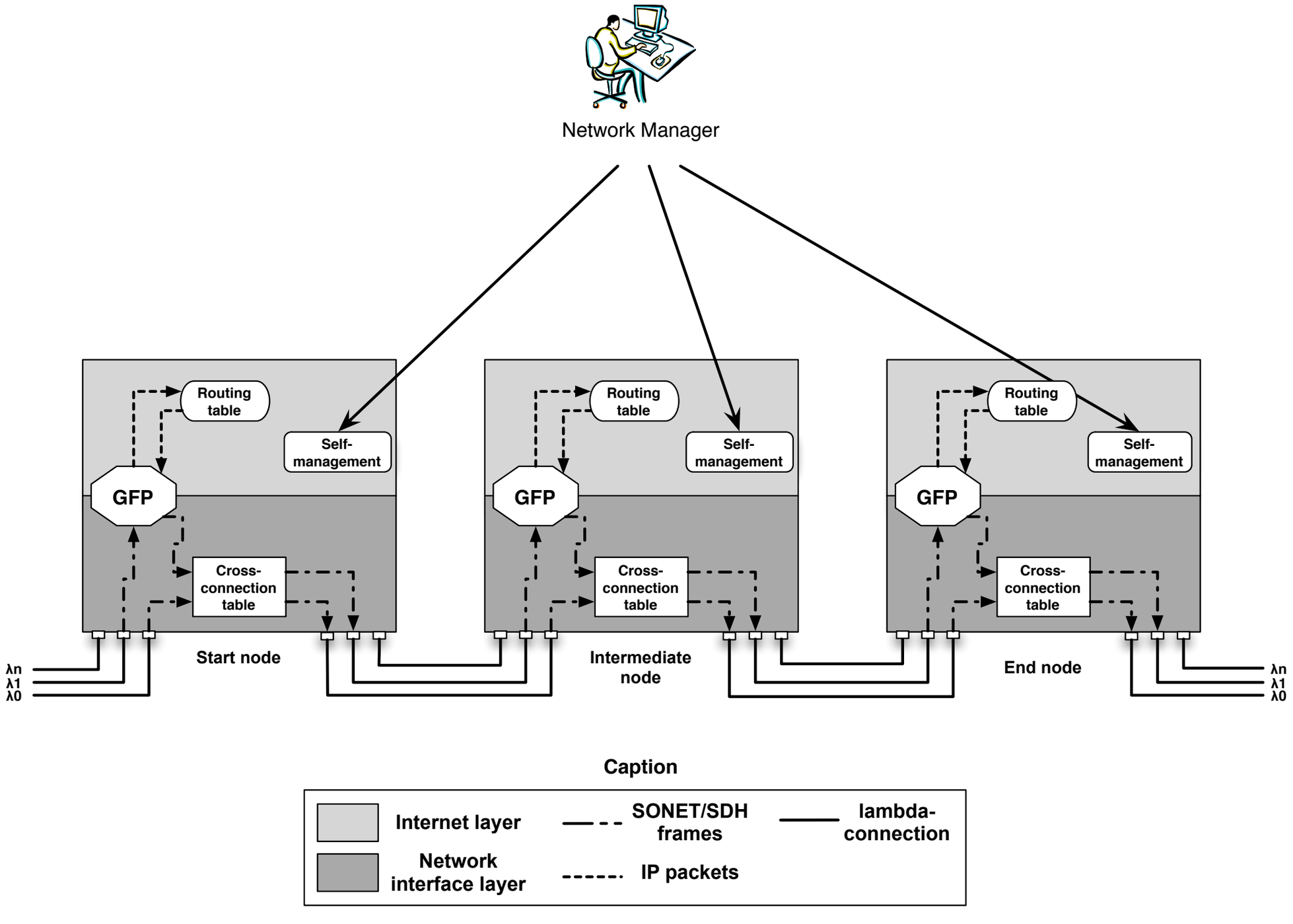

Functional architecture

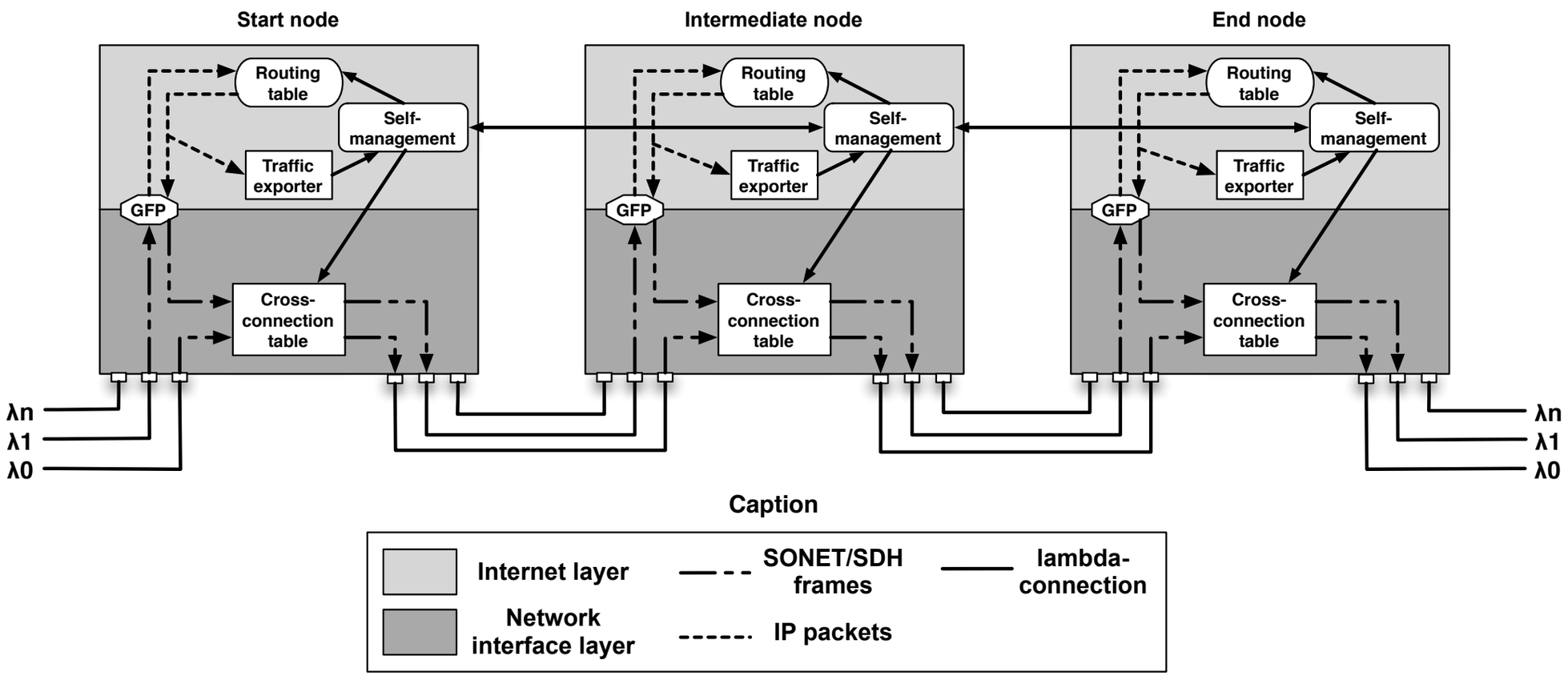

Zooming in into the self-management module

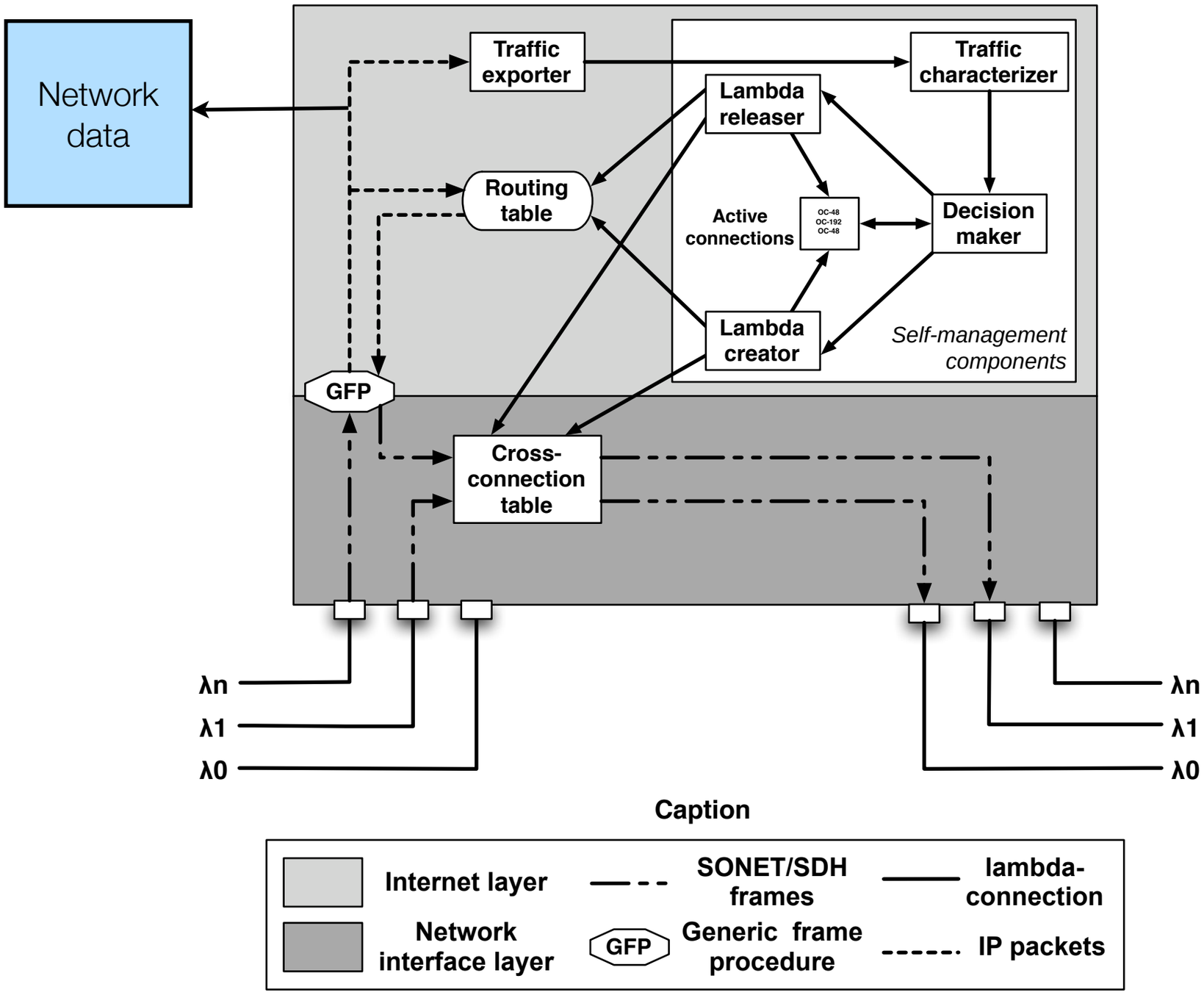

Zooming in into the self-management module

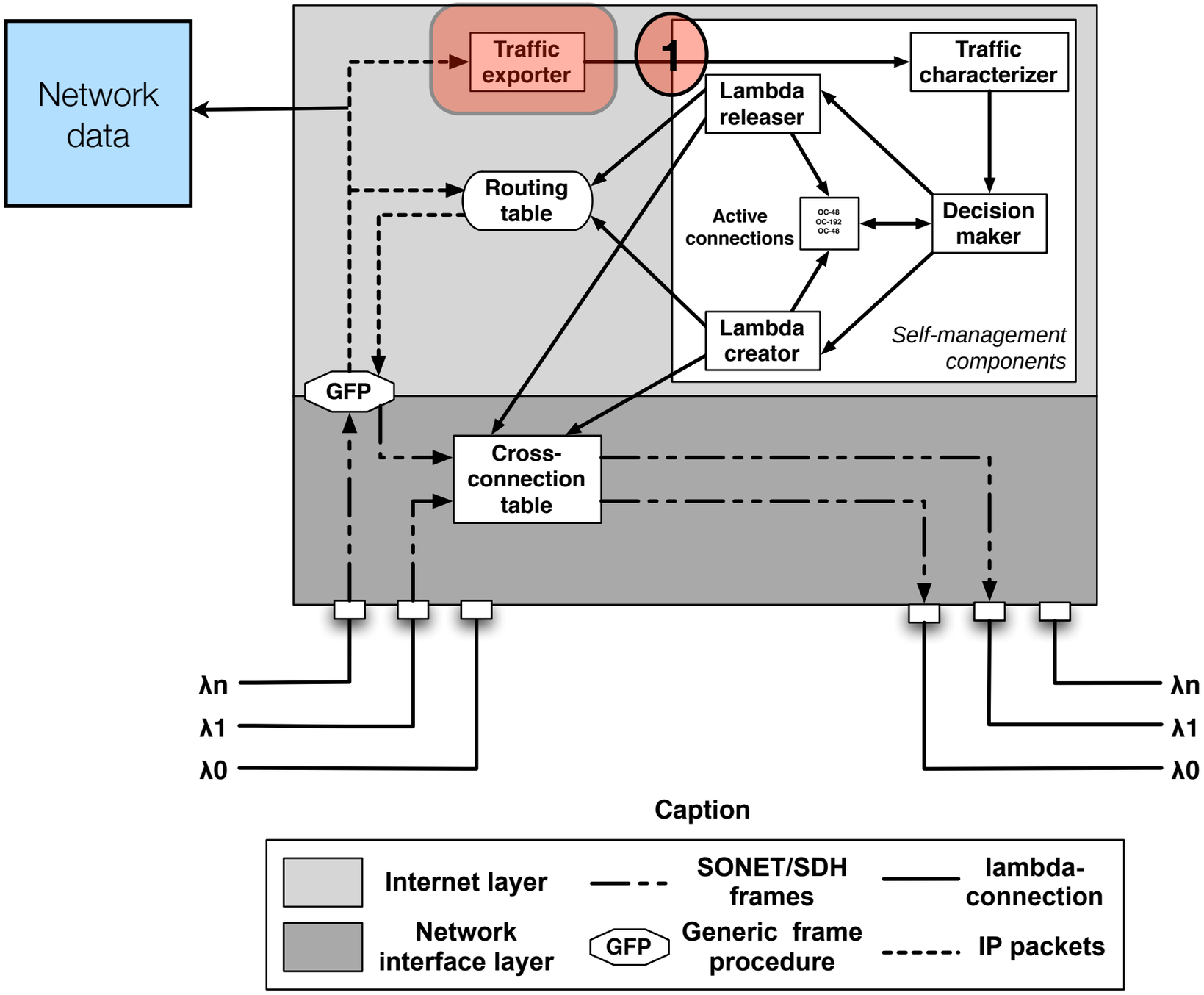

Zooming in into the self-management module

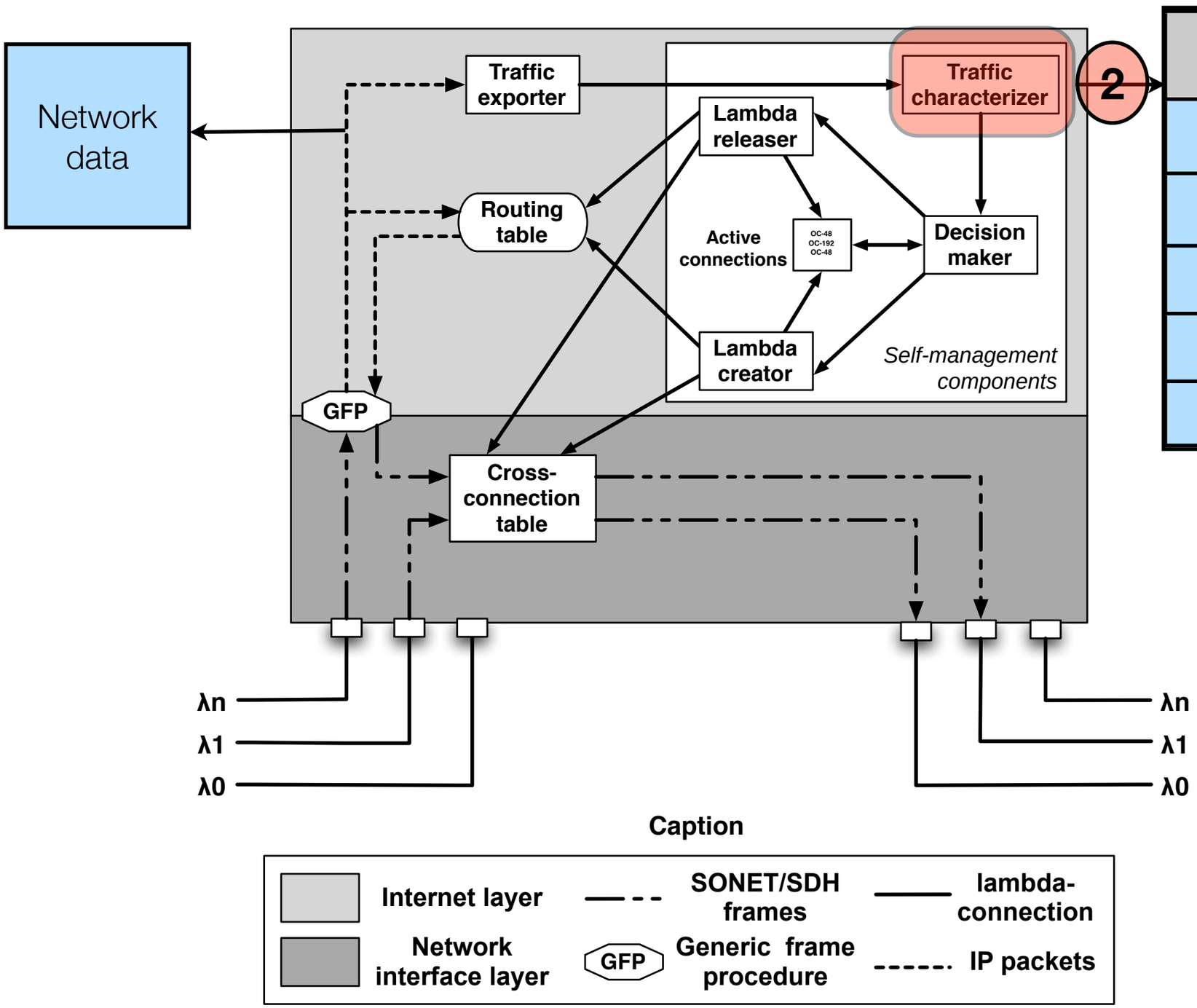

IP Flow	Throughput
1	350 Mbps
2	170 Mbps
3	54 Mbps
4	45 Mbps
5	17 Mbps

Zooming in into the self-management module

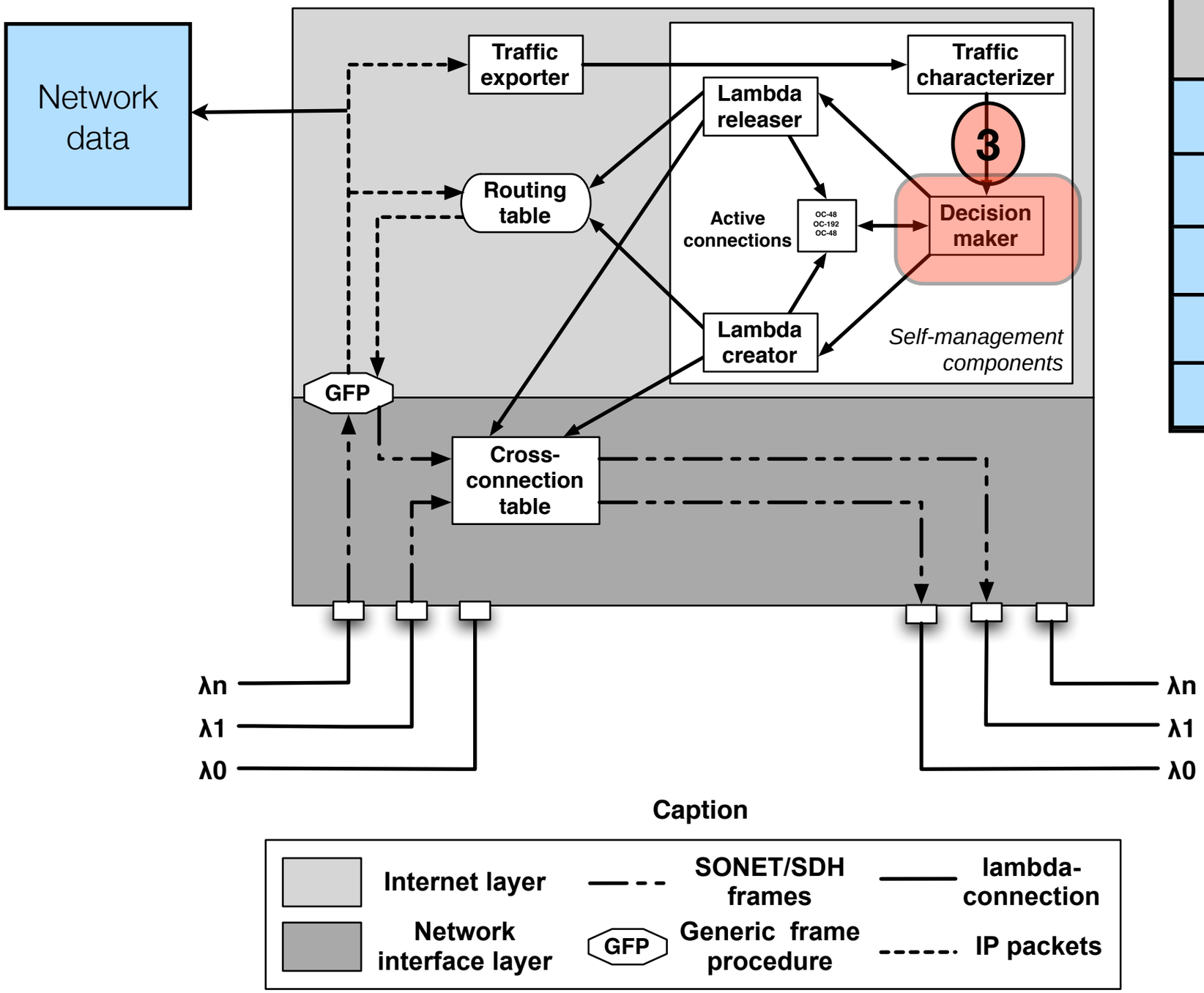

IP Flow	Throughput
1	350 Mbps
2	170 Mbps
3	54 Mbps
4	45 Mbps
5	17 Mbps

Zooming in into the self-management module

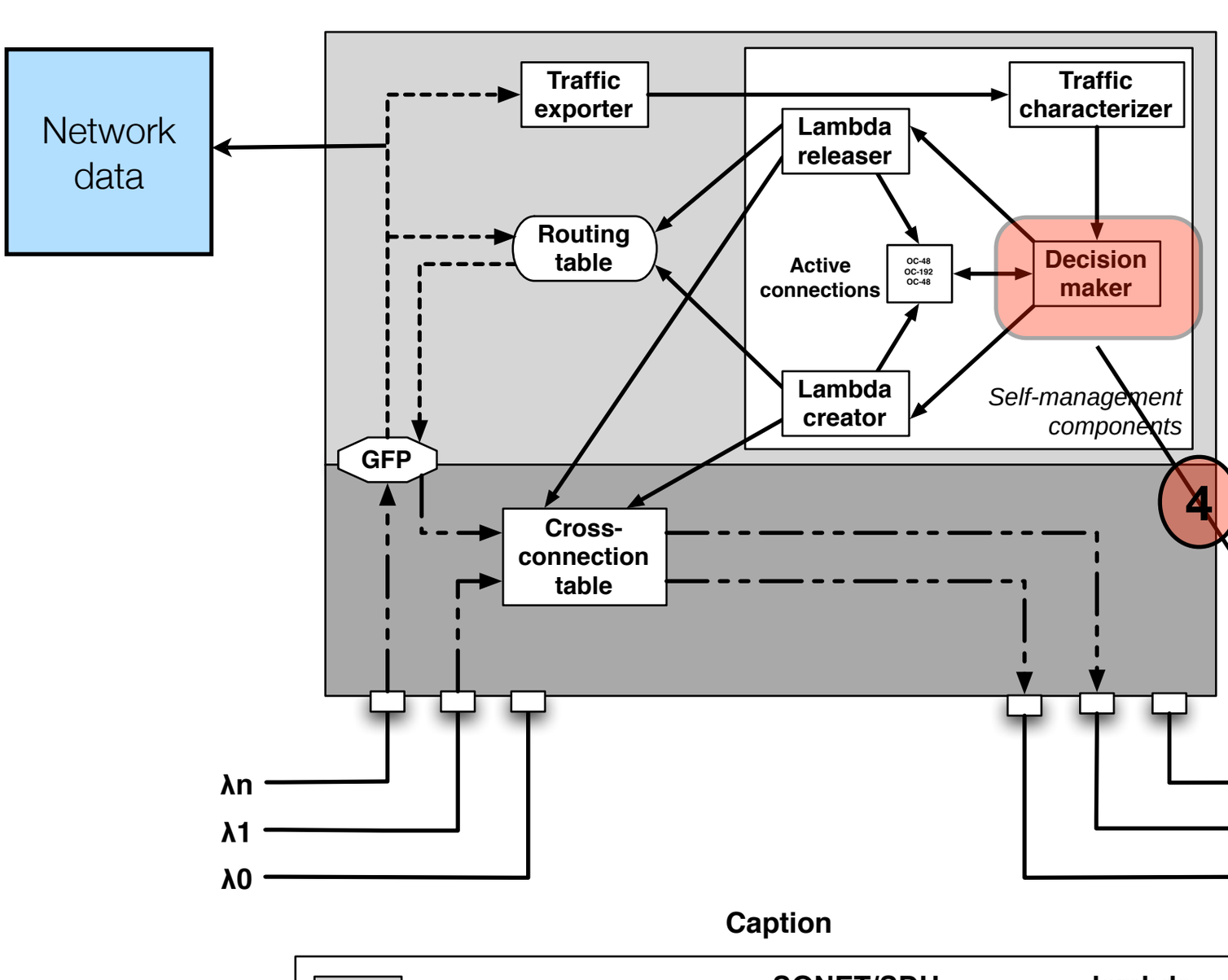

IP Flow	Throughput
1	350 Mbps
2	170 Mbps
3	54 Mbps
4	45 Mbps
5	17 Mbps

Any IP flows equal or bigger than 50 Mbps (OC-1)?
Yeap... flows 1, 2, and 3

Zooming in into the self-management module

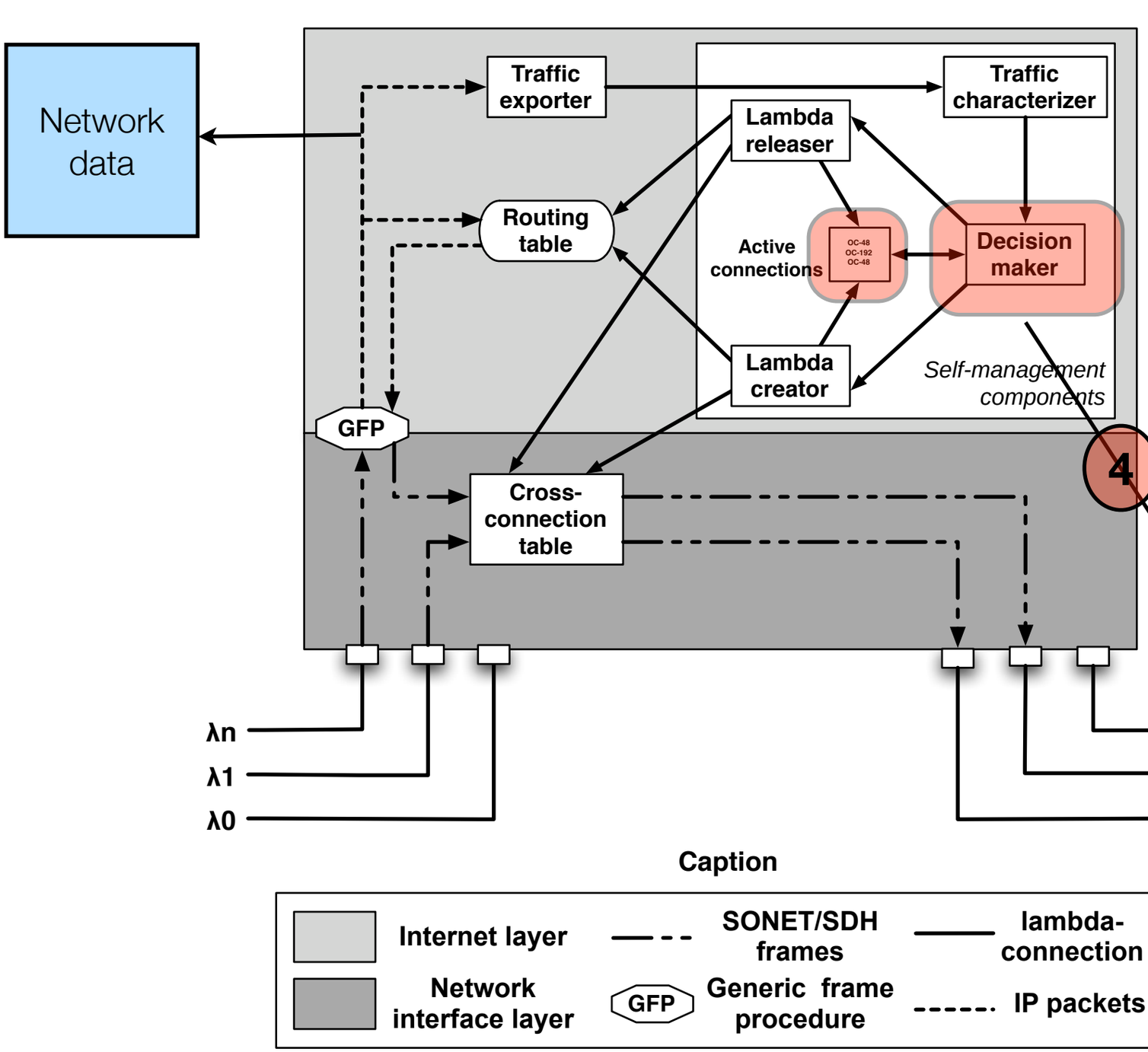

IP Flow	Throughput
1	350 Mbps
2	170 Mbps
3	54 Mbps
4	45 Mbps
5	17 Mbps

Any IP flows equal or bigger than 50 Mbps (OC-1)?
Yeap... flows 1, 2, and 3

Are these flows already at the optical level?
Not yet!
Create the connection then

Zooming in into the self-management module

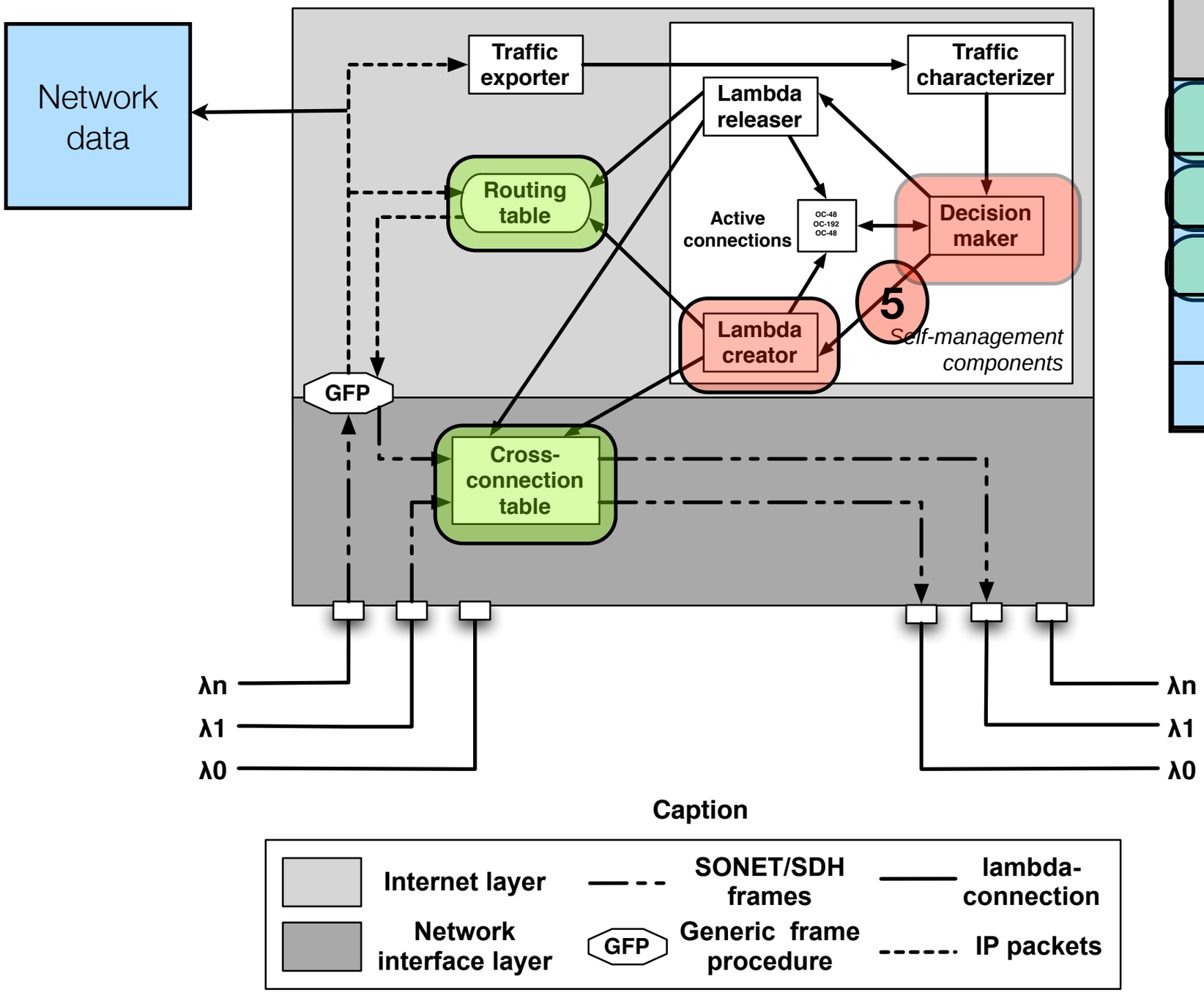

IP Flow	Throughput
1	350 Mbps
2	170 Mbps
3	54 Mbps
4	45 Mbps
5	17 Mbps

Zooming in into the self-management module

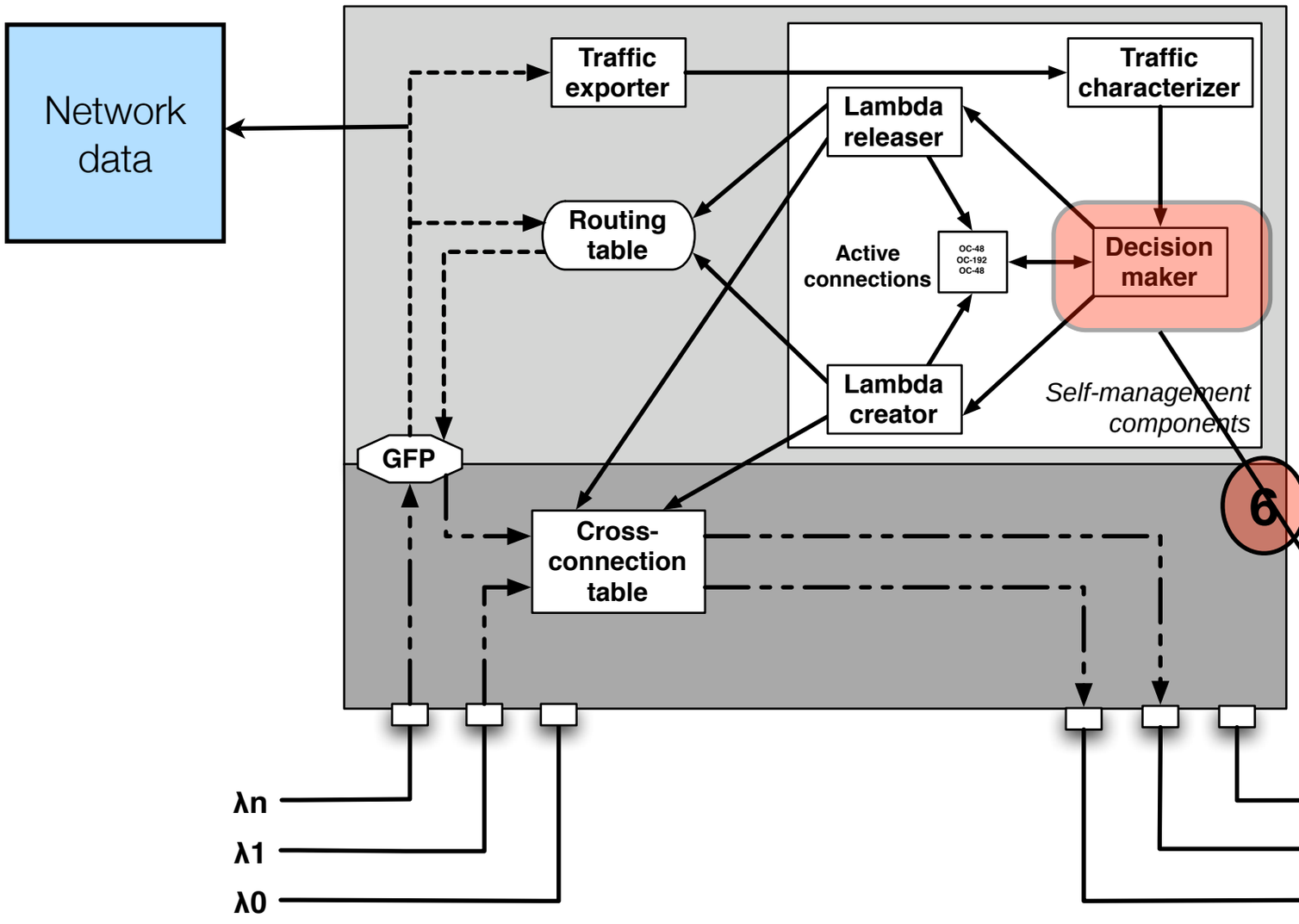

IP Flow	Throughput
1	350 Mbps
2	170 Mbps
3	54 Mbps
4	45 Mbps
5	17 Mbps

Any IP flows smaller than 50 Mbps?
Yeap... flows 4, and 5

Zooming in into the self-management module

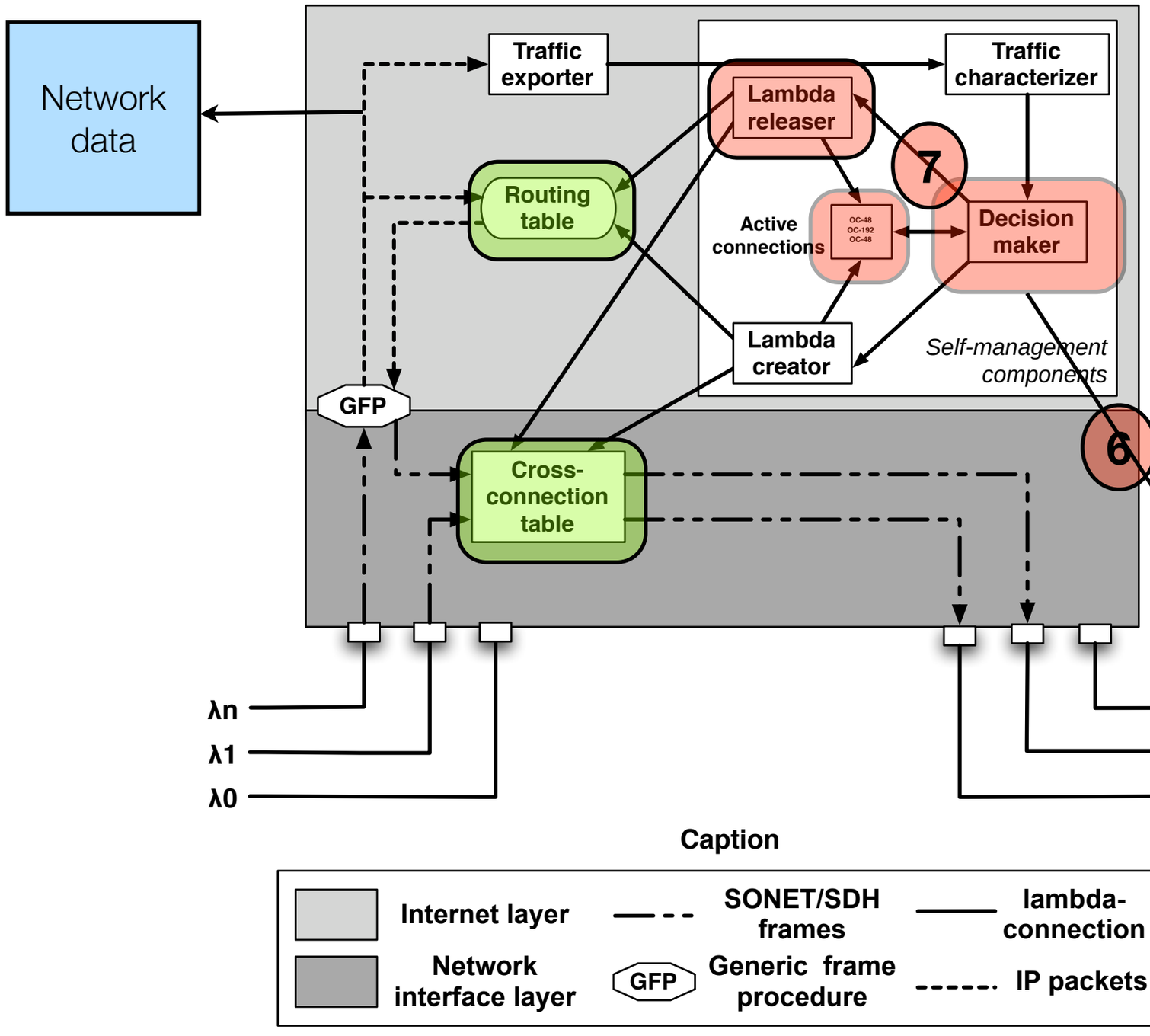

IP Flow	Throughput
1	350 Mbps
2	170 Mbps
3	54 Mbps
4	45 Mbps
5	17 Mbps

Any IP flows smaller than 50 Mbps?
Yeap... flows 4, and 5

Are these flows already at the optical level?
Yes, they are!
Release the connection then

Physical architecture

- What is physical architecture?
  - Our physical architecture consists of showing the physical location of the functional blocks

- Why is the self-management module outside?
  - Vendors may not be willing to change the implementation of the optical switches operating systems

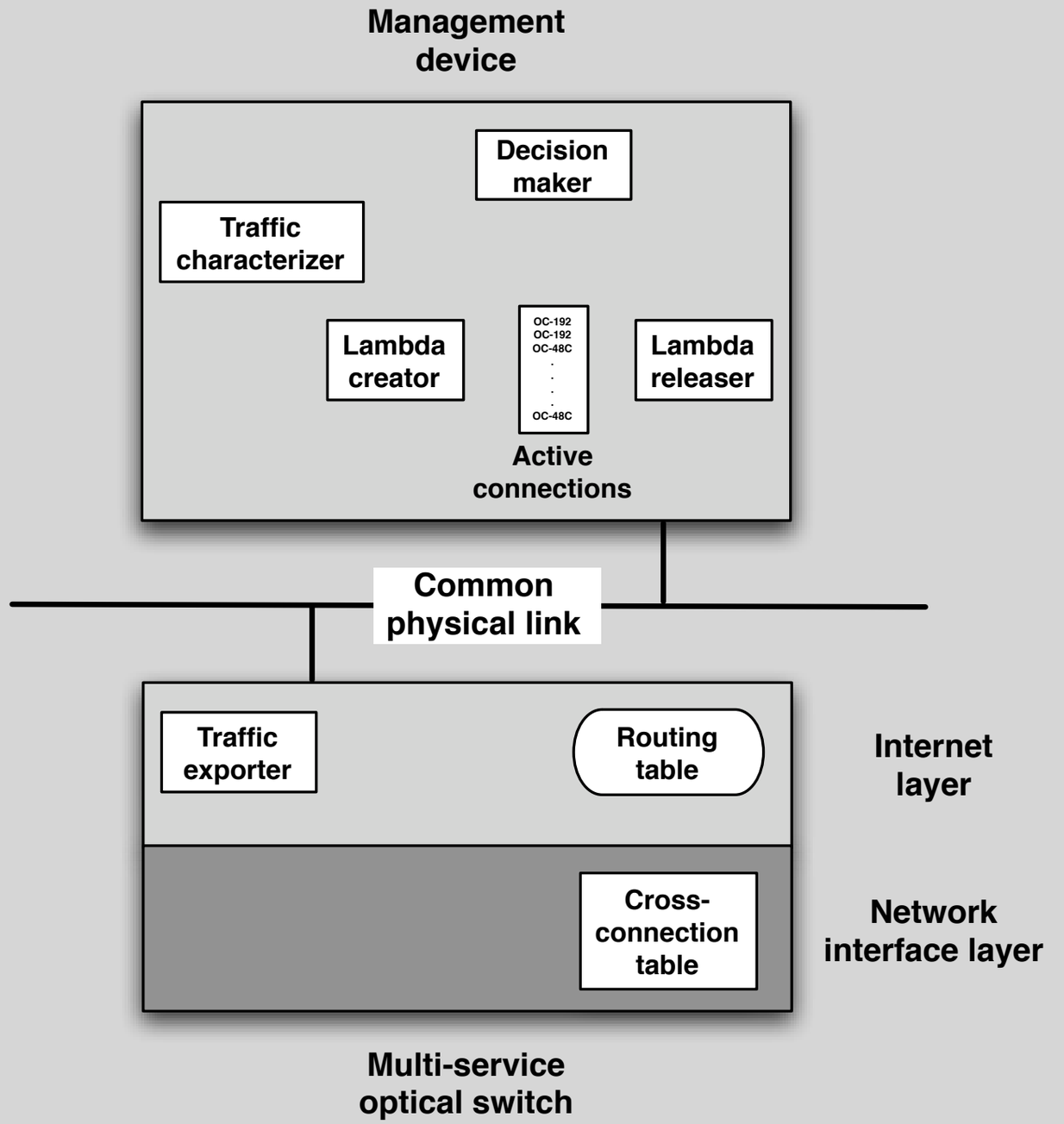

Analyzing flow characteristics

- NetFlow analysis was performed by using different definitions for a flow
- 2 weeks of NetFlow data were divided in 5 and 30 minutes intervals
- **Criterion**: An IP flow is eligible to the optical level if its total consumed bandwidth is equal or bigger than the minimal unit of transmission in SONET networks in a certain time interval: average throughput >= 50.112 Mbit/s.

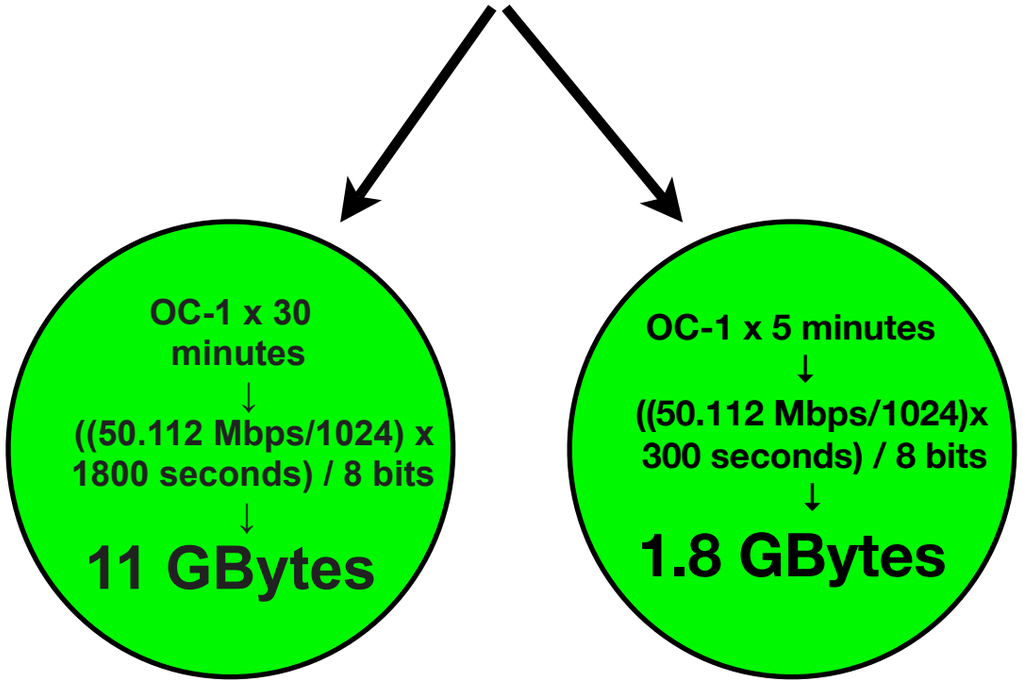

Criterion 1 Criterion 2

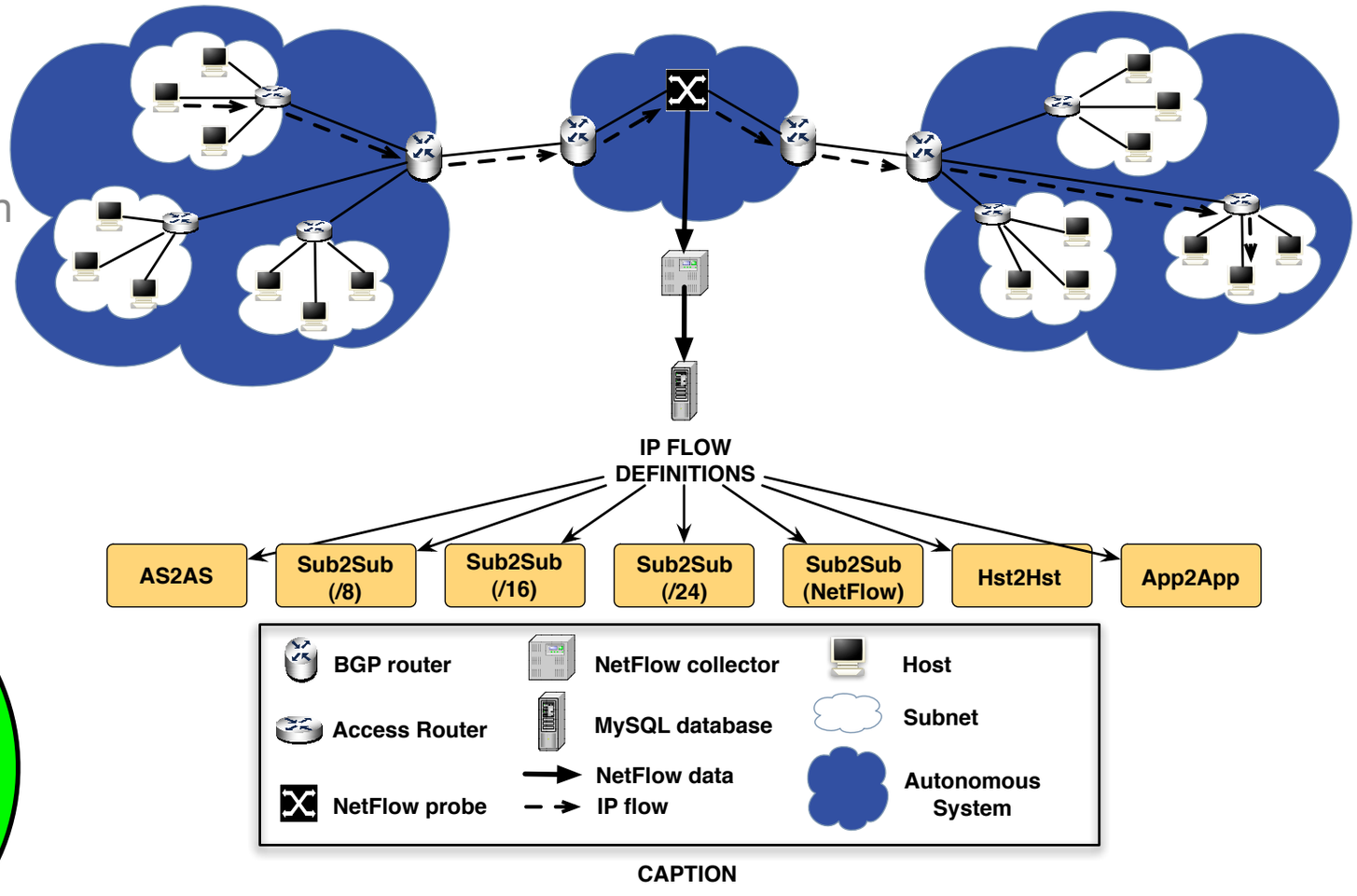

NetFlow data analysis scenario

Characteristics of IP flows eligible to lambda-connections

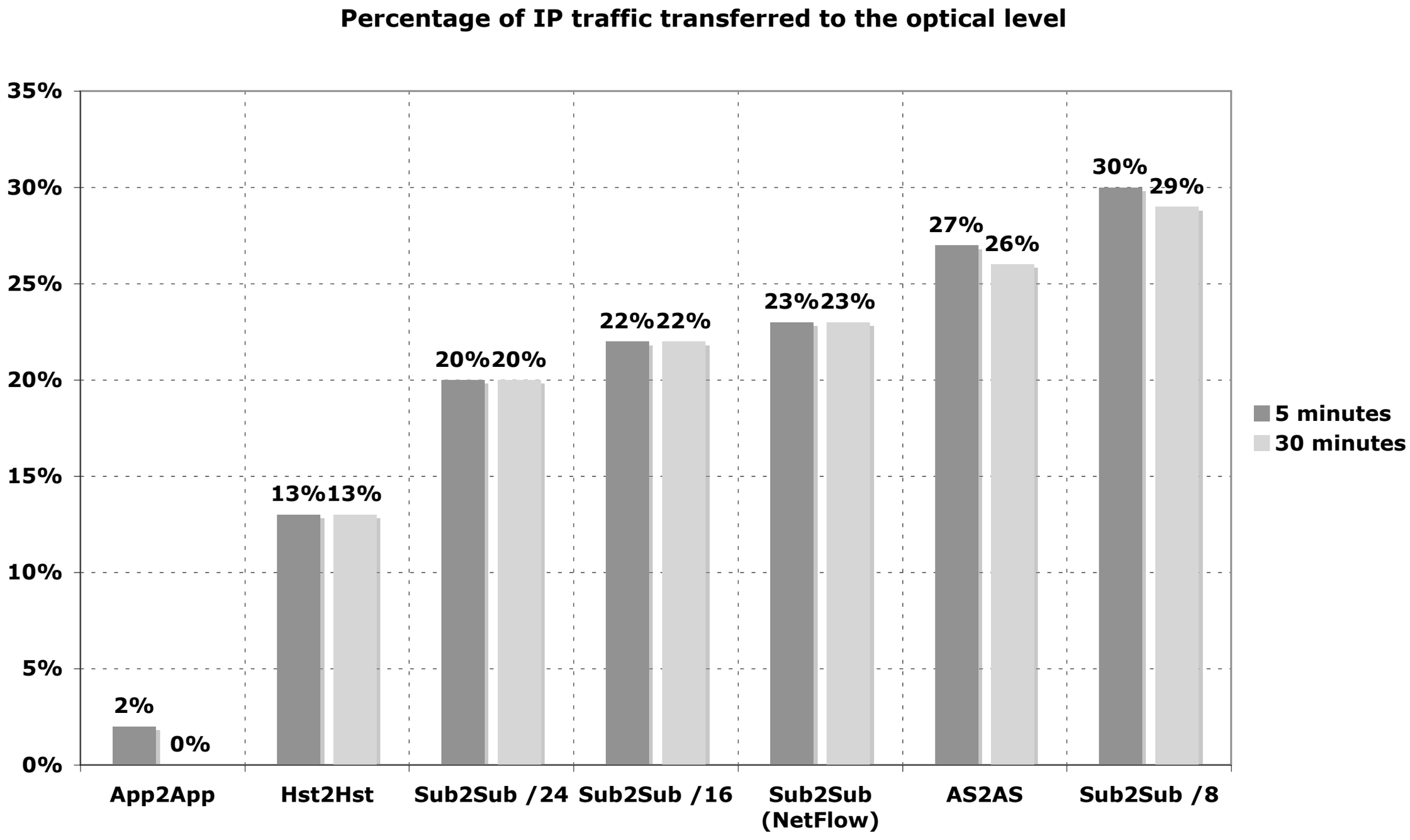

Characteristics of IP flows eligible to lambda-connections

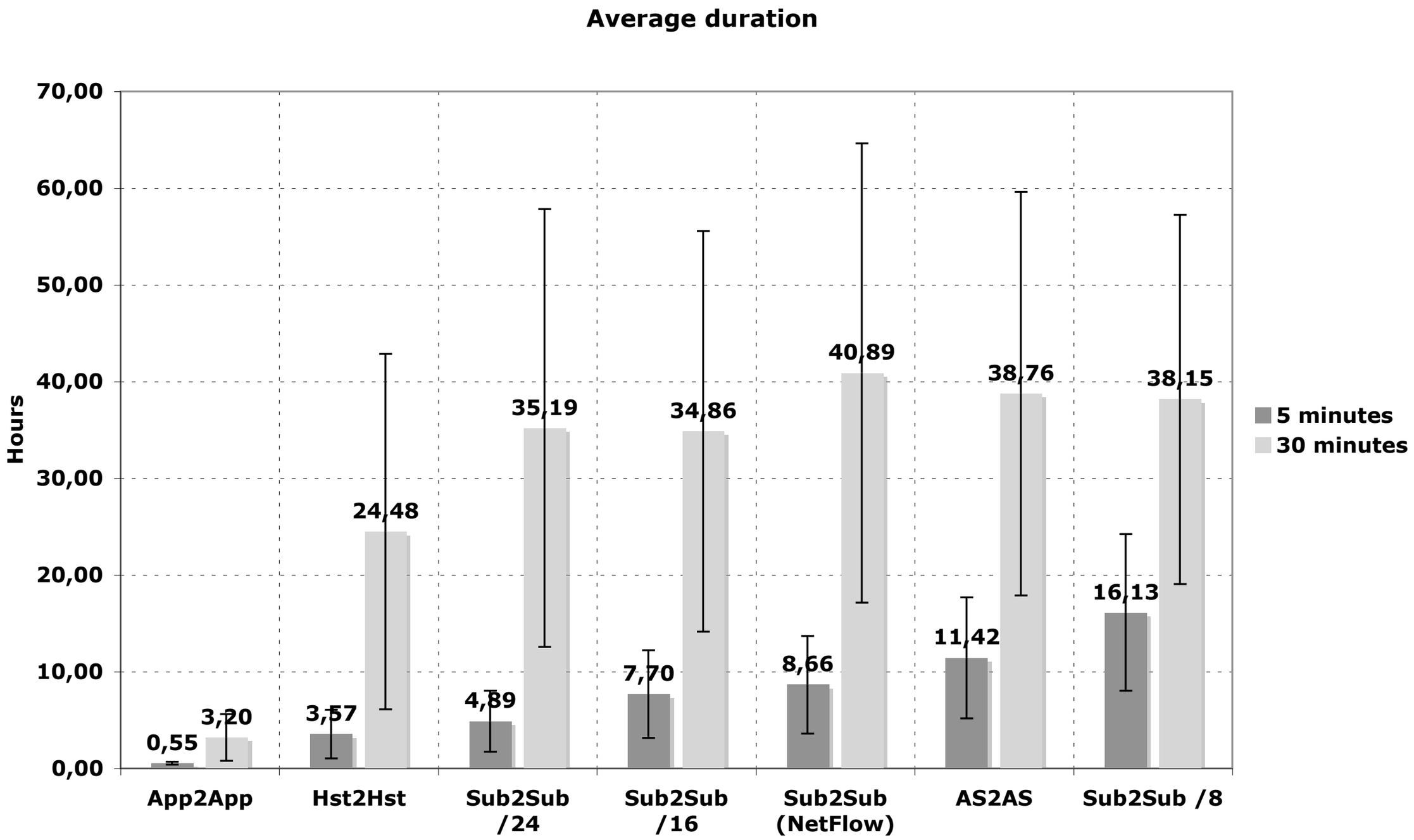

Characteristics of IP flows eligible to lambda-connections

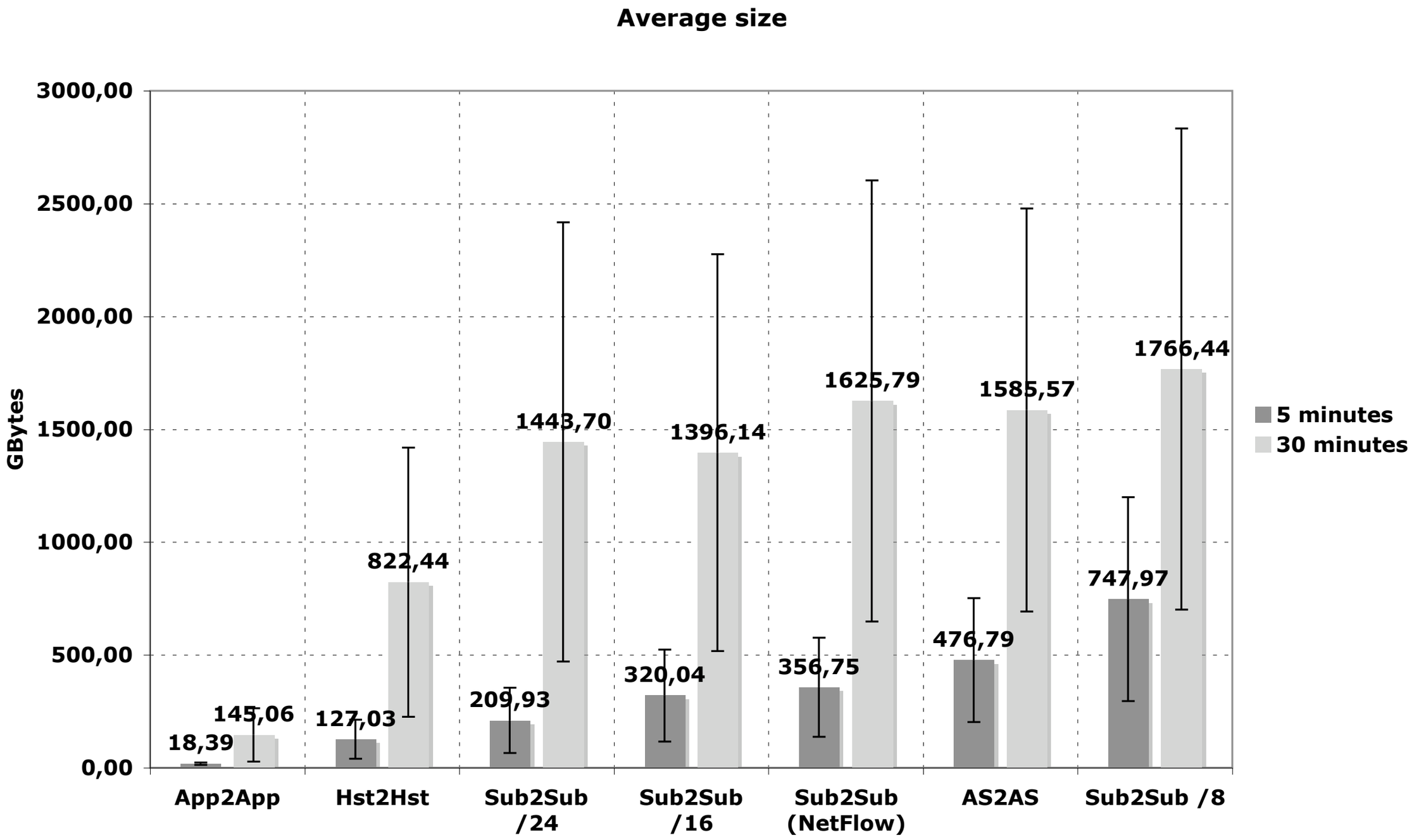

Characteristics of IP flows eligible to lambda-connections

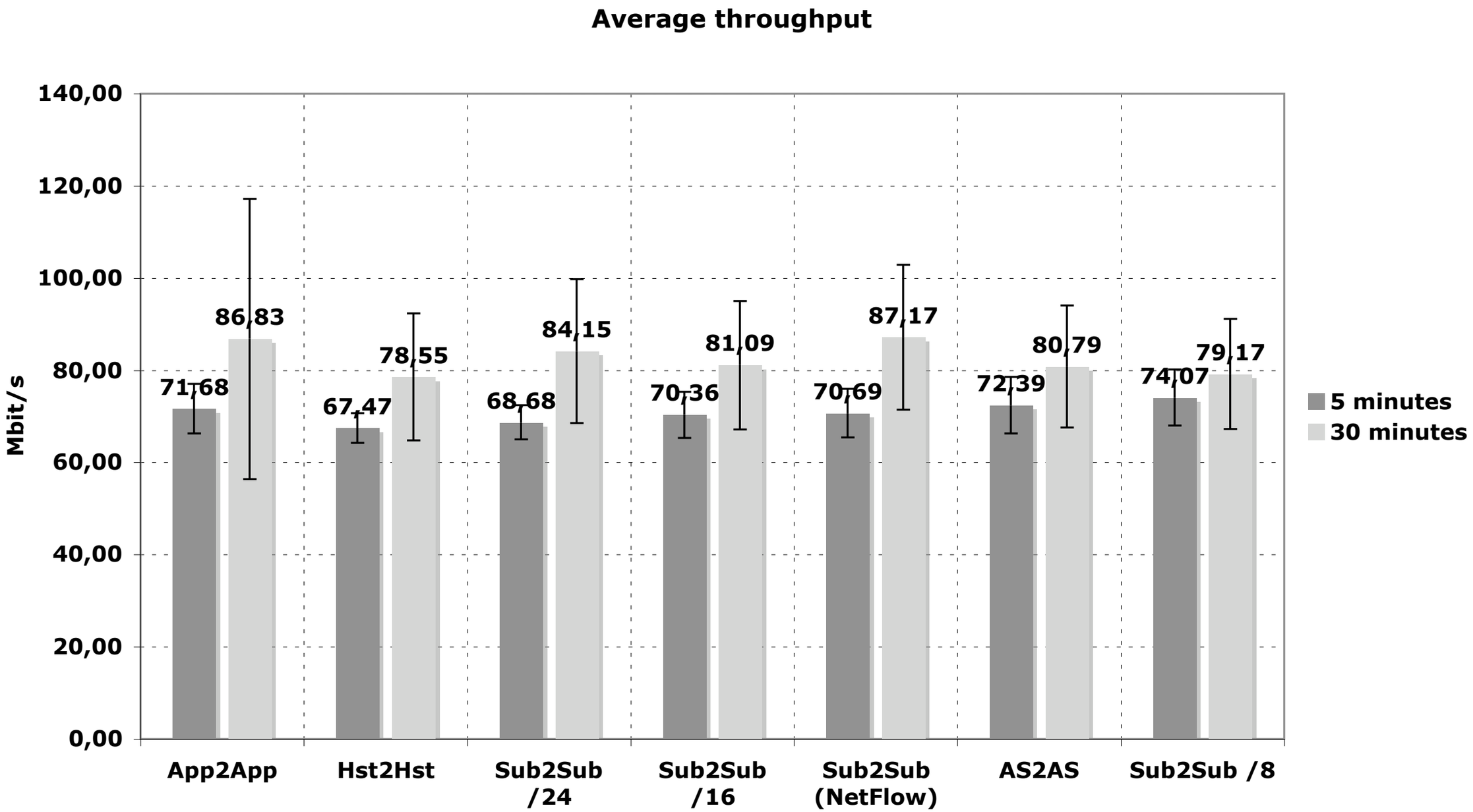

Current challenge

- **Current challenge:** given the flow throughput, is it possible to estimate its duration and volume?

- **Purpose**: in order to help deciding when a lambda-connection should be allocated to a certain flow as well as what the required link capacity should be used

- **Approach used**: 45 minutes of non-sampled NetFlow data was collected from the UT network and stored into a MySQL database for analysis

Flow rate vs frequency

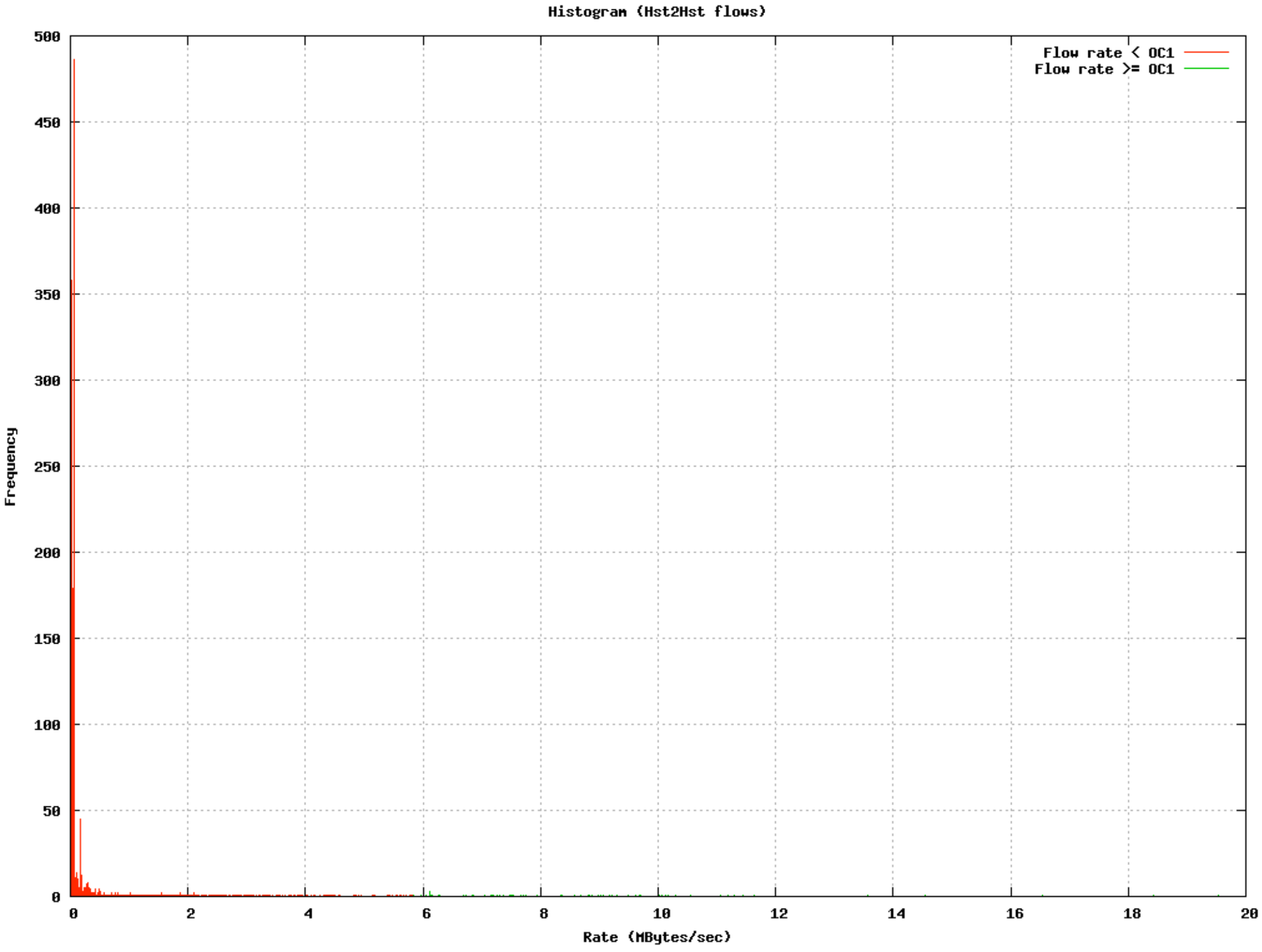

Flow rate vs volume

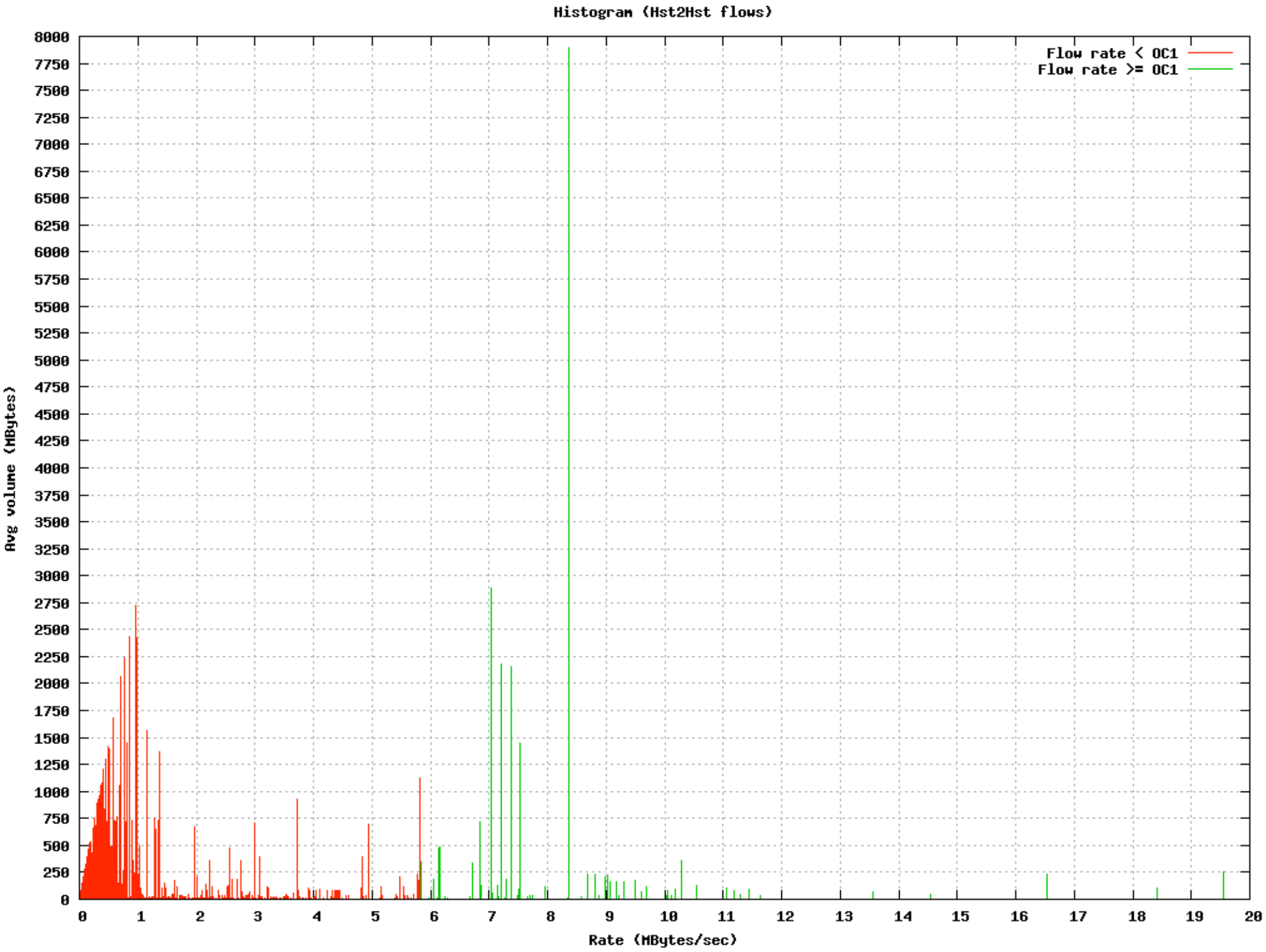

Flow rate vs duration

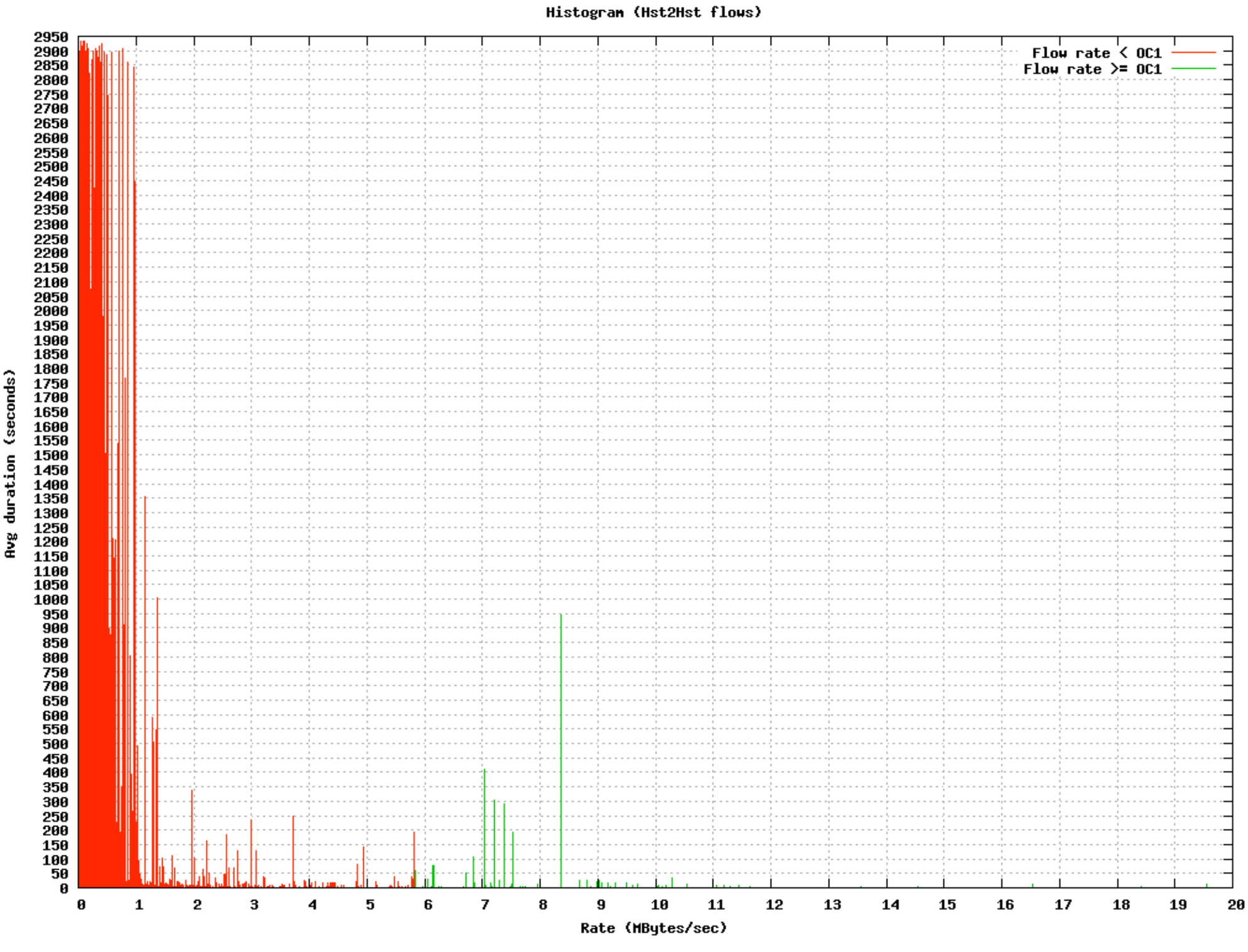

Final considerations

- Error proneness and slowness are inherent in current management approaches of lambda-connections

- The self-management approach aims at reducing human interaction by automatizing:
  - the detection of IP flows
  - management (establishment/release) of lambda-connections

- Preliminary results show that IP flows present considerable variability in their behavior, which makes the search for patterns a difficult task

Final considerations

- Open issues:
  - How to deal with the splitting of data between the optical and network levels?
  - How to accurately estimate the flow variance?

Thanks for you attention!

- Special thanks to SURFnet and EMANICS for their support with this research work
- Contact information:

Tiago Fioreze

t.fioreze@utwente.nl

Aiko Pras
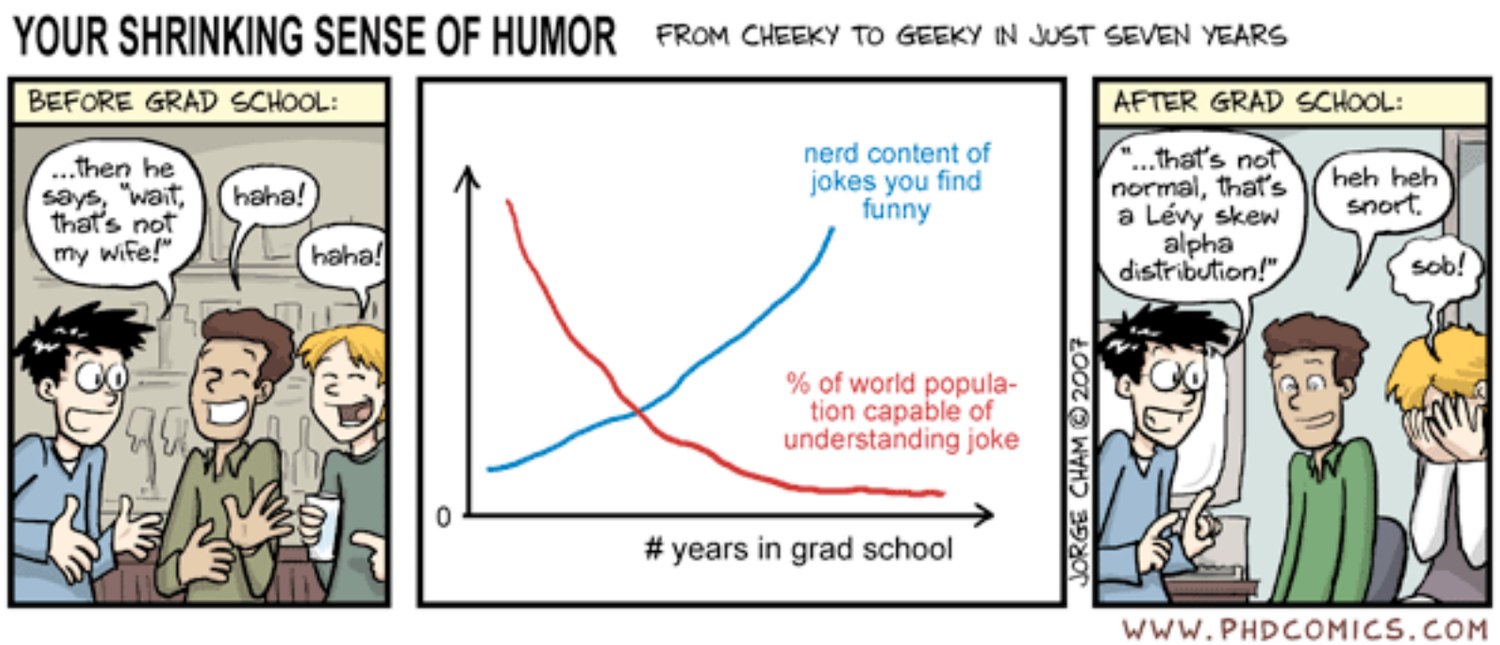
a.pras@utwente.nl